TTFSS1
TTFSS1.SchDoc

TTFSS2
TTFSS2.SchDoc

Title: *Test Schematic*		*LIGO Laboratory* *California Institute of Technology* *Massachusetts Institute of Technology*	LIGO
Size: D	DCC Number:	SCH / PCB Revision: 0	Engineer:
File: ©:\ECHOLHO\Boards\Joshua\TTFSS\Rev A\TTFSS0.SchDoc			Date: 7/21/2007 Time: 3:10:48 PM Sheet 0 of 0

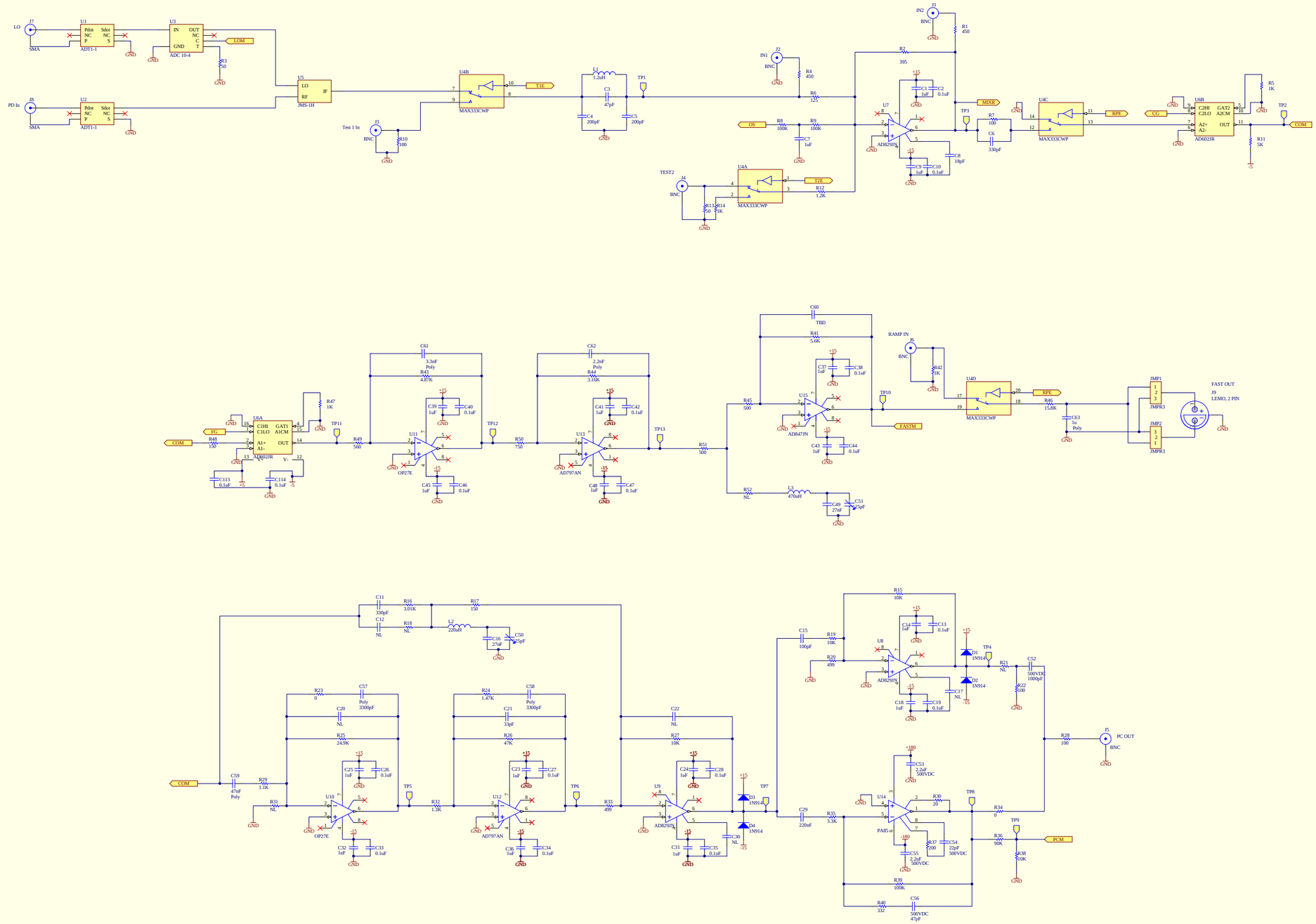

Title	*TT Frequency Stabilization Servo Amplifier Board*
Size: D	DCC Number: D040105
SCH / PCB Revision:	
File:	~/ECHO/LHOBoards/Joshua/TTFSS/RevA/TTFSS1.SchDoc

LIGO Laboratory
California Institute of Technology
Massachusetts Institute of Technology

LIGO

Drawn By:	*R. Abbott*
	P. Schwinberg, JR Myers
Date:	7/23/2007
Time:	3:10:28 PM
Sheet 1 of 2	

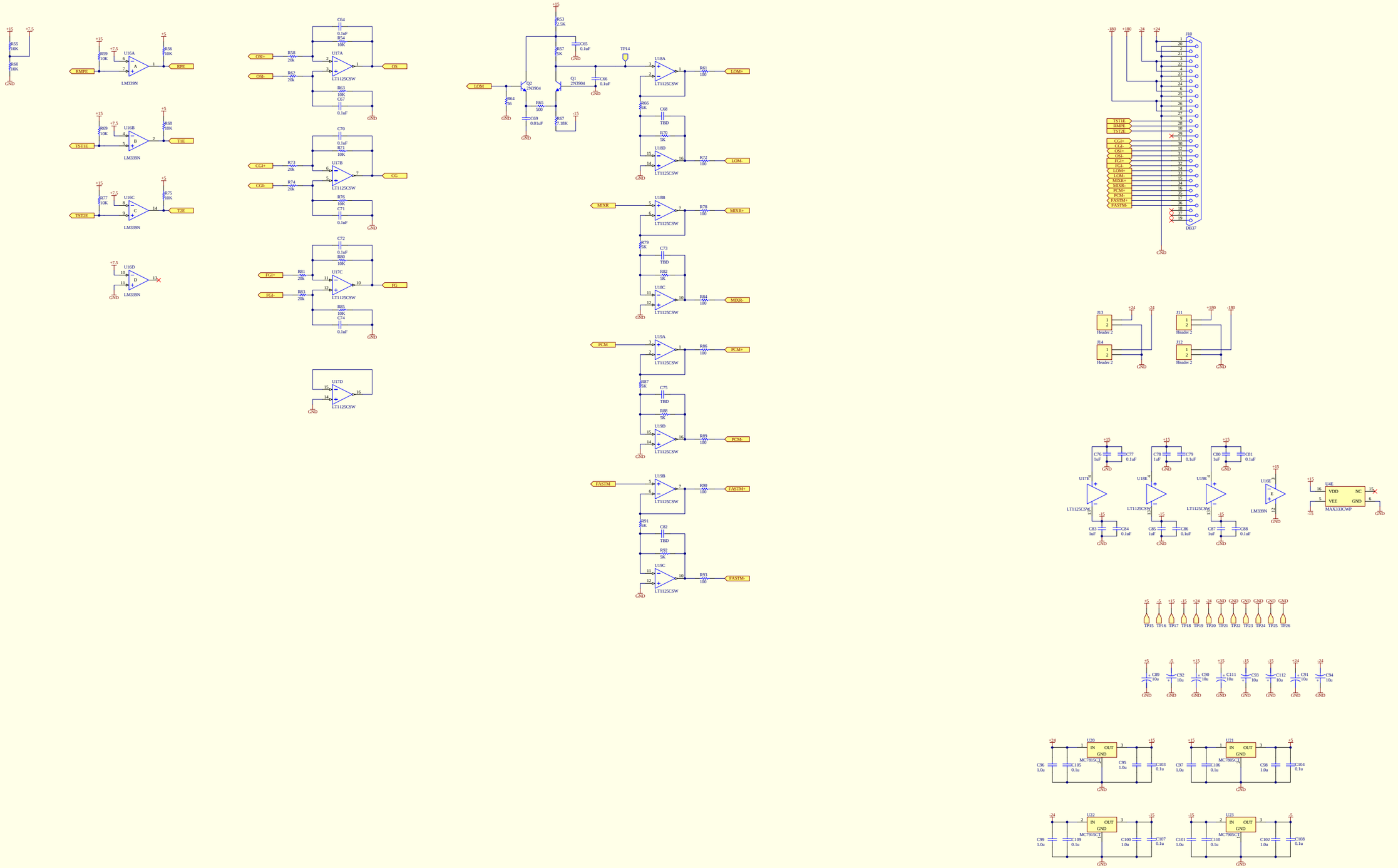

Original Version Through Rev. F Designed and Drawn by Rich Abbott
Table Top Version by Paul Schweinberg and Drawn by Josh Myers

1/26/04

Title	**Frequency Stabilization Servo Amplifier Board**	LIGO Laboratory California Institute of Technology Massachusetts Institute of Technology	LIGO
Size: D	DCC Number: D980356	SCH / PCB Revision:	Engineer: Rich Abbott
File: \\EC\HO\LHOBoards\Joshua\TTFSS\RevA\TTFSS2.SchDoc			Date: 7/23/2007 Time: 3:10:49 PM Sheet 2 of 2