INTRALINK NAME: D080005

REV.	DATE	DCN #	DRAWING TREE #
-	-	-	-

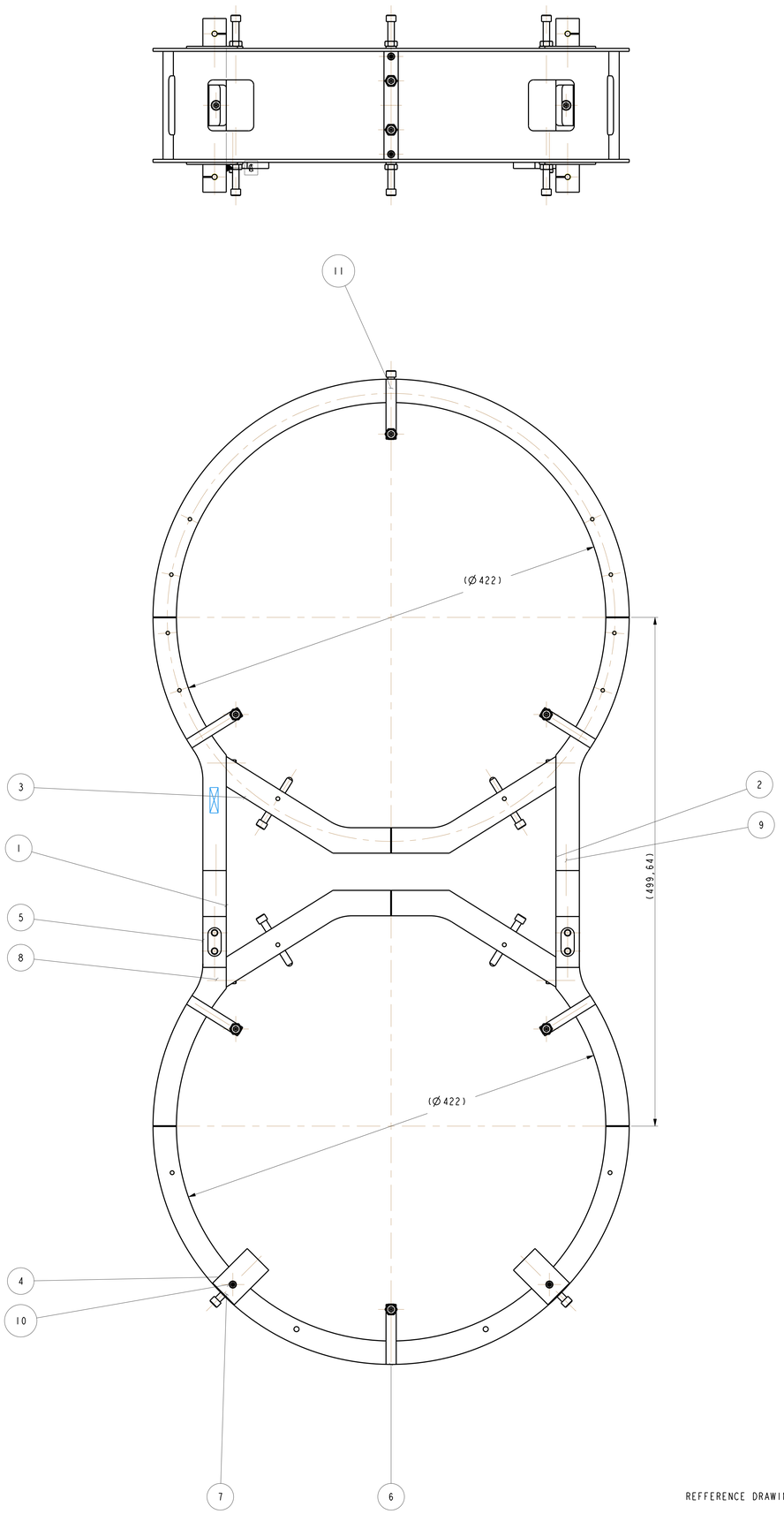

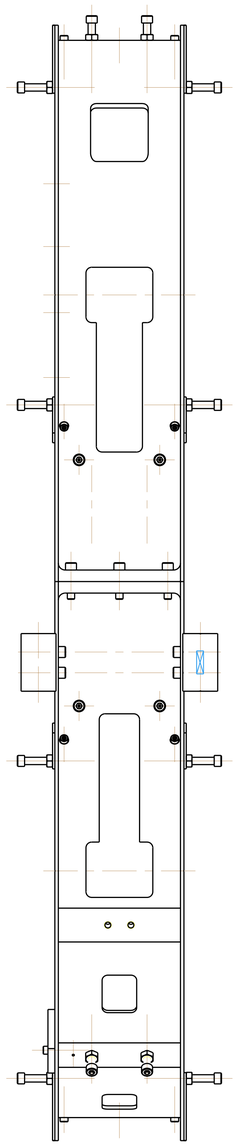

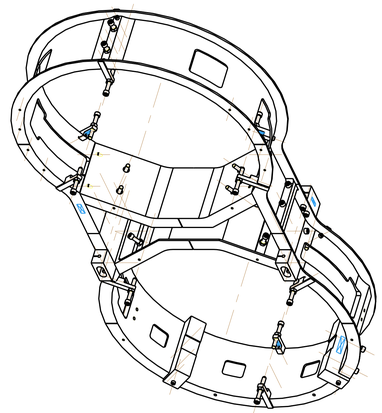

SCALE 0,250

REFFERENCE DRAWING ONLY; DO NOT ASSEMBLE

ITEM	QTY	SPAR	TOTAL	PART NUMBER	DESCRIPTION	MATERIALS
1	1			D080006	BS LOWER STRUCTURE; BS LS BOTTOM HALF	AL ALLOY: 6061 OR SIMILAR
2	1			D080007	BS LOWER STRUCTURE; BS LS TOP HALF	AL ALLOY: 5084 OR SIMILAR
3	2			D080008	BS LOWER STRUCTURE; LWR EQ STOP PLATE	AL ALLOY: 6061 OR 5083
4	2			D080010	BS LOWER STRUCTURE; BS TM SLIDING PAD	PFA 440 HP; SIMILAR TO PTFE
5	4			D080011	BS LOWER STRUCTURE; LS - US - BRACKET	AL ALLOY: 5083 OR SIMILAR
6	12			D080012	BS LOWER STRUCTURE; BS LS EQ STOP BRACKE	AL ALLOY: 5083 OR SIMILAR
7	26				1/4 20 UNC NUT;	
8	8				1/4" 20 UNC X 0.5" CAP HEAD; .	
9	14				1/4" 20 UNC X 1" CAP HEAD;	
10	26				1/4" 20 UNC X 2" CAP HEAD, SPHERICAL TIP; .	
11	14				8-32 UNC X 0.5" CAP HEAD; .	

PARTS LIST

NOTES: (UNLESS OTHERWISE SPECIFIED)

1. REMOVE ALL SHARP EDGES, 0.03 MIN.
2. DO NOT SCALE FROM DRAWING.
3. ALL MACHINING FLUIDS SHALL BE WATER SOLUBLE AND FREE OF SULFUR, CHLORINE, AND SILICONE. THE MACHINING FLUID SHALL CONTECH 410 (STAINLESS STEEL).
4. STRIKE, ENGRAVE OR STAMP DRAWING PARTNUMBER ON NOTED SURFACE OF PART AND A THREE DIGIT SERIAL NUMBER (STARTING WITH 001) ON EACH PART. PARTS SHALL BE NUMBERED AND PROCESS CONSECUTIVELY. USE .07" HIGH CHARACTERS. EXAMPLE: D020100- 001. A VIBRATORY TOOL MAY BE USED.

DIMENSIONS ARE IN mm [INCHES]
TOLERANCES:
X.XX ± mm [INCHES]
ANGULAR ±

MATERIAL: AS DRW

FINISH: CLEAN, GREASE FREE
Ra = AS DRW

	NAME	DATE
DRAWN	REVITEL	03/09/08
CHECKED	J'SO	JAN 2008
APPROVED	IR	JAN 2008

LIGO
CALIFORNIA INSTITUTE OF TECHNOLOGY
MASSACHUSETTS INSTITUTE OF TECHNOLOGY
LIGO GLASGOW UNIVERSITY GEO 600 GROUP
RUTHERFORD APPLETON LABORATORIES

SYSTEM ADVANCED LIGO
SUB-SYSTEM SUS
NEXT ASST THIS
PART NAME BEAMSPLITTER TRIPPLE
BS LOWER STRUCTURE

SIZE E | DRG. NO. D080005 | REV F

SCALE 0,500PROJECTION: SHEET 1 OF 1