RELEASE FOR PRODUCTION, DCN No. E030521, 10.30.03

REVISIONS				
REV.	DCN	DESCRIPTION	DATE	APPR.
A	10/15/03	E030521-00-E		

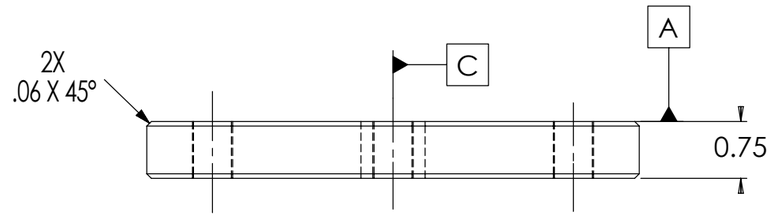

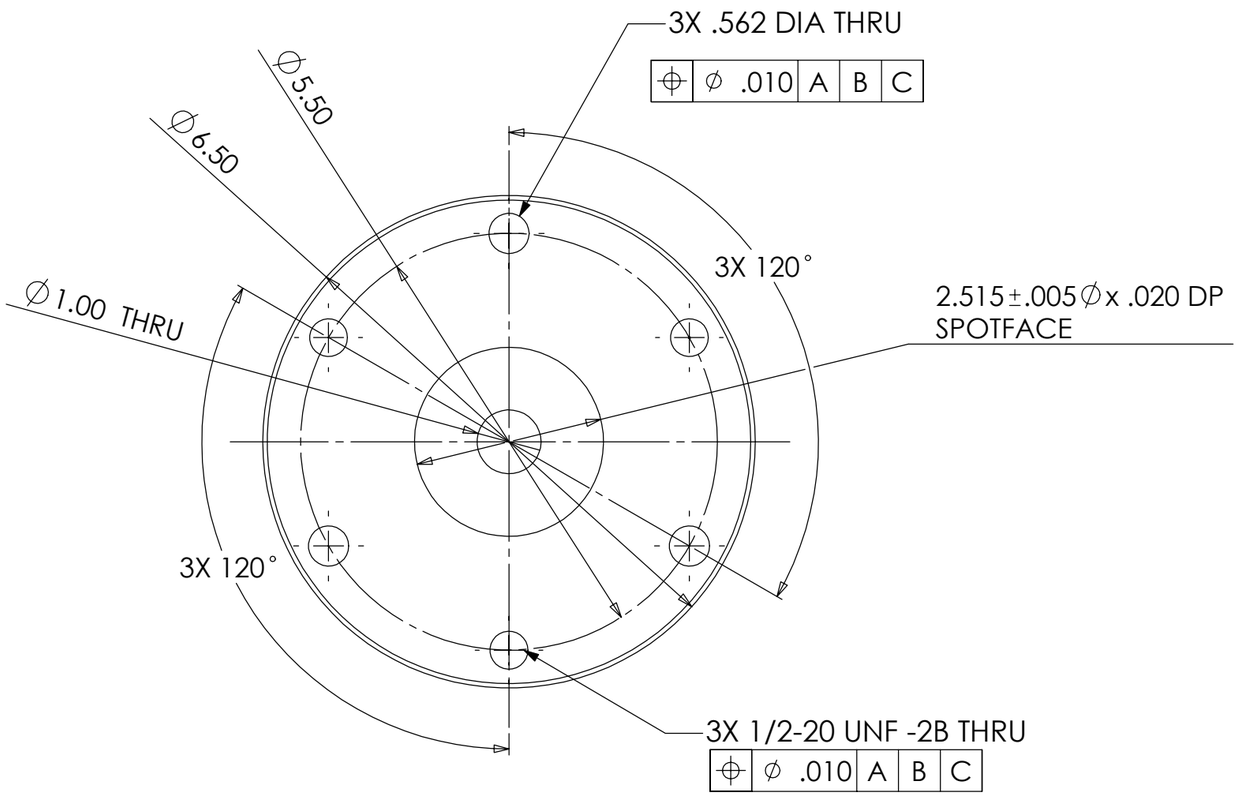

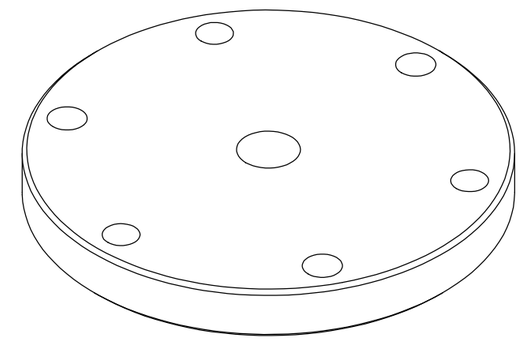

NOTES: UNLESS OTHERWISE SPECIFIED
1. REMOVE ALL BURRS AND BREAK SHARP EDGES TO A MAXIMUM OF .015
2. PART NUMBER (DRAWING NO., DASH NO., REVISION NO.)
   TO BE CLEARLY MARKED ON THE PART ITSELF
3. PAINT:
   ALL VISIBLE SURFACES
   MEDIUM BLUE SHERWIN WILLIAMS (POLANE (R) T-PLUS
   POLYURETHANE ENAMEL) #SW-F63TX-L-2822-5864
   PRIME WITH SHERWIN WILLIAMS INDUSTRIAL WASH PRIMER P60G2
4. BOTH TAPPED AND THRU HOLES WILL BE PLUGGED DURING APPLICATION.
   MASK 2.415 DIA SPOTFACE

UNLESS OTHERWISE SPECIFIED
DIMENSIONS ARE IN INCHES
TOLERANCES ARE:
DECIMALS .X±.06 .XX± .01 .XXX±.005
ANGLES

MATERIAL 1018 CRS

FINISH SEE NOTE 5

DO NOT SCALE DRAWING

LIGO

CALIFORNIA INSTITUTE OF TECHNOLOGY
MASSACHUSETTS INSTITUTE OF TECHNOLOGY

APPROVALS	DATE
DRAWN D. MASON	1/3/02
CHECKED K. MASON	1/3/02
SCALE 1:2	SIZE B

SPRING MOUNTING PLATE
PRE- ISOLATOR

DWG. NO. D020002A-D REV A

CAD FILE: D020002-A.SLDDRW SHEET 1 OF 1