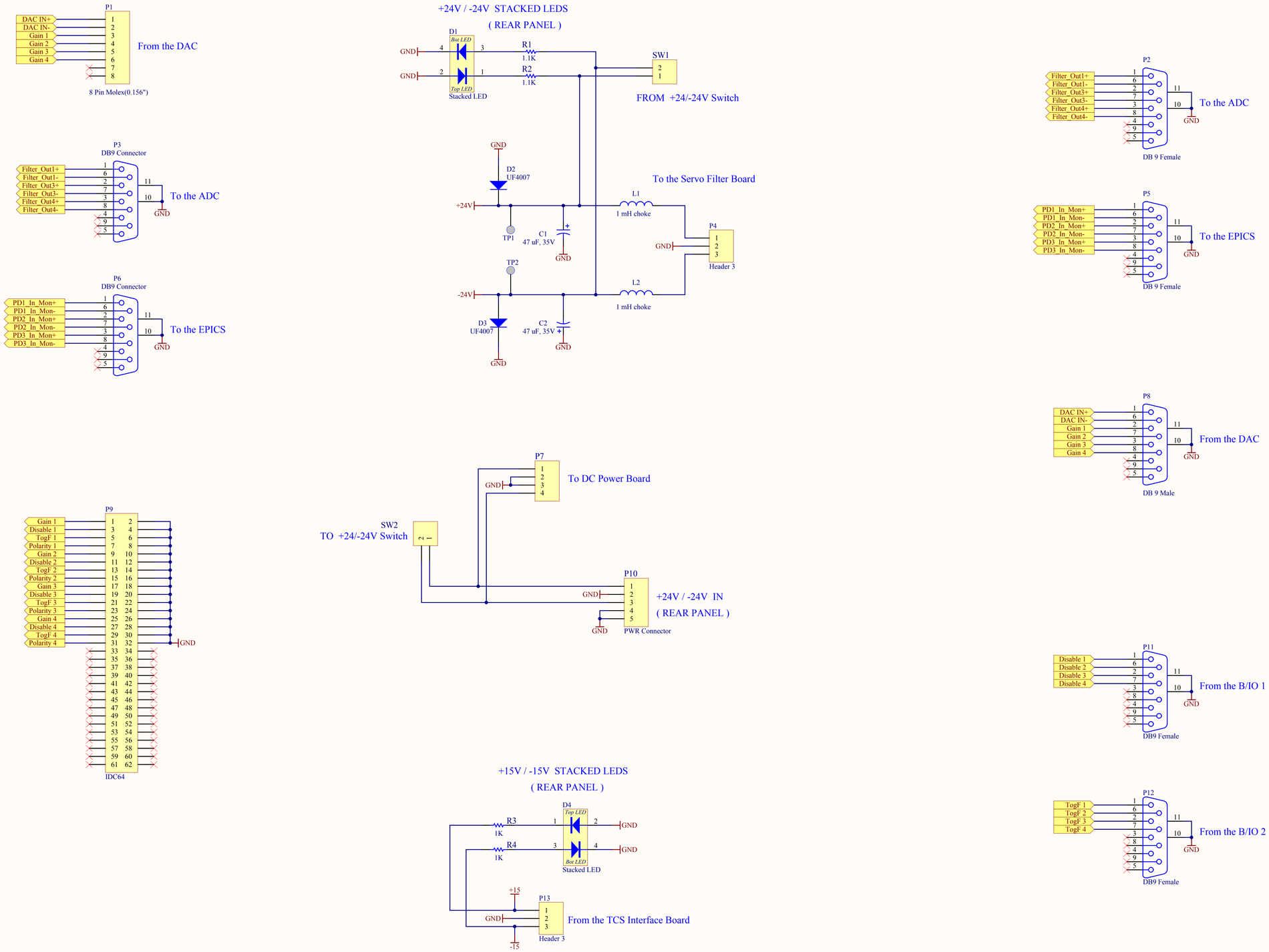

Last Edited:

Title
TCS Chassis Connector Board

California Institute of Technology

LIGO

Size: C	DCC Number: D080119	SCH / PCB Revision: A	Engineer: *M. Mageswaran*

Date: 6/19/2008
Time: 10:58:01 AM
Sheet * of *

File: C:\Design_DXP\TCS_ISS\TCS Chassis Connector 030108\D080119.SchDoc