REV.	DATE	DCN #	DRAWING TREE #
-	-	E1100131	-
-	-	-	-
-	-	-	-

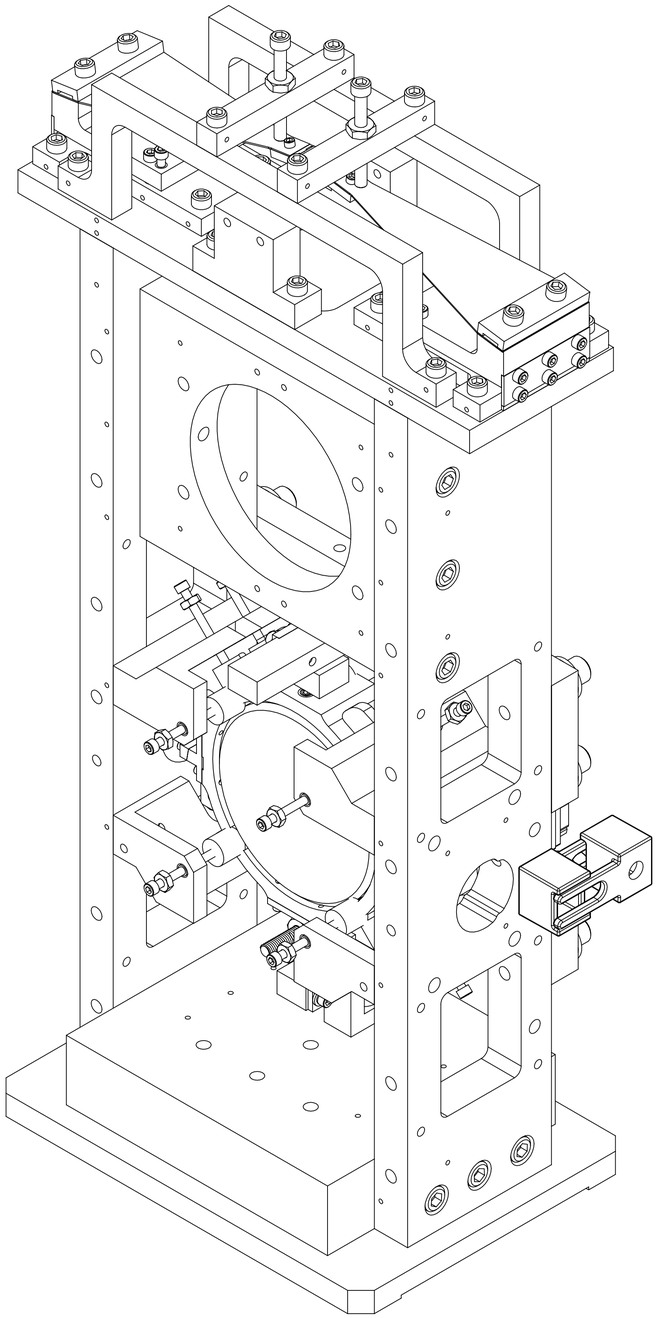

ITEM NO.	PART NUMBER	DESCRIPTION	MATERIAL	SUPPLIER	NOTES	REQ	SPARE	TOTAL
65	92158A432	SCREW, SOCKET SET, 0.25-20 UNC-2A X 0.5 LONG	300 SSTL	MCMASTER	ASME B18.3	4	1	5
64	75464388	SCREW, SOCKET HEAD CAP, 1/4-20 UNC-2A X 0.875 LONG, FULLY THREADED	300 SSTL	HK, MSC		6	2	8
63	D060546	IMPACT ABSORBER FOR GLASS STOPS	FLUOROELASTOMER	molders.com	SEE E970130	14	3	17
62	D960501	Magnet	As Noted			4	2	6
61	4C125KCSS/FT	SCREW, SOCKET HEAD CAP, #4-40 UNC-2A X 1.25 LONG, FULLY THREADED	300 SSTL	MIL-SPEC FASTENERS CORP		14	3	17
60	8C150KCSS/FT	SCREW, SOCKET HEAD CAP, #8-32 UNC-2A X 1.5 LONG, FULLY THREADED	300 SSTL	MIL-SPEC FASTENERS CORP		2	1	3
59	2C31KCSS	SCREW, SOCKET HEAD CAP, #2-56 UNC-2A X 0.3125 LONG, FULLY THREADED	300 SSTL	MIL-SPEC FASTENERS CORP		4	1	5
58	4C62KCSS	SCREW, SOCKET HEAD CAP, #4-40 UNC-2A X 0.625 LONG, FULLY THREADED	300 SSTL	MIL-SPEC FASTENERS CORP		4	1	5
57		30" OF ∅0.006" WIRE FROM CFW812 SPOOL	MUSIC WIRE, HARD TEMPER	CALIFORNIA FINE WIRE		2	2	4
56	D0900004	UHV COMPATIBLE CABLE CLAMP	PEEK	CDS		4	2	10
55	82272071	SCREW, SOCKET HEAD CAP, #4-40 UNC-2A X 0.375 LONG, FULLY THREADED	300 SSTL	HK, MSC		12	3	15
54	R82232609	SCREW, SOCKET HEAD CAP, #4-40 UNC-2A X 0.5 LONG, FULLY THREADED	300 SSTL	HK, MSC		18	4	22
53	82272741	SCREW, SOCKET HEAD CAP, #8-32 UNC-2A X 0.625 LONG, FULLY THREADED	300 SSTL	HK, MSC		12	3	15
52	R82232308	SCREW, SOCKET HEAD CAP, #8-32 UNC-2A X 0.75 LONG, FULLY THREADED	300 SSTL	HK, MSC		16	3	19
51	78062	SCREW, SOCKET HEAD CAP, 1/4-20 UNC-2A X 1 LONG, FULLY THREADED	300 SSTL	HK, MSC		15	5	26
50	D1002368	EDDY CURRENT MAGNET	Material <not specified>	KJ MAGNETICS		4	1	5
49		EP30-2 EPOXY	EPOXY	MASTERBOND				
48	91475A029	WASHER, SPLIT LOCK, 0.26 I.D., 0.363 O.D., 0.078 THICK PER ASME B18.21.1	300 SSTL	MCMASTER	MIL 35338	8	2	10
47	91475A018	WASHER, SPLIT LOCK, 0.12 I.D., 0.173 O.D., 0.022 THICK PER ASME B18.21.1	300 SSTL	MCMASTER	MIL 35338	4	1	5
46	92158A381	SCREW, SOCKET SET, #10-32 UNF-2A X 0.5 LONG	316 SSTL	MCMASTER	ASME B18.3	2	2	8
45	91950A029	1/4" FLAT WASHER	AISI 304	MCMASTER	SAE	8	2	10
44	92217A360	#4 FLAT WASHER	AISI 304	MCMASTER	ASME B18.22.1	4	1	5
43	93181A411	HEX NUT, #10-32	ALUMINUM	MCMASTER	ANSI/ASME B18.6.3	1	1	2
42	1185-04EN112	HELICOIL, #4-40 X 0.112 LONG	NITRONIC 60	MCMASTER		12	3	15
41	1185-04EN224	HELICOIL, #4-40 X 0.224 LONG	NITRONIC 60	MCMASTER		34		
40	1185-2EN164	HELICOIL, #8-32 X 0.164 LONG	NITRONIC 60	MCMASTER		2	1	3
39	1185-2EN328	HELICOIL, #8-32 X 0.328 LONG	NITRONIC 60	MCMASTER		4	1	5
38	1191-3EN380	HELICOIL, #10-32 X 0.38 LONG	NITRONIC 60	MCMASTER		1	1	2
37	D0901065	AOSEM	Material <not specified>	SUS		4	0	4
36	C-205-NA	SCREW, SOCKET HEAD CAP, #2-56 UNC-2A X 0.3125 LONG, FULLY THREADED	Ag-PLATED 300 SSTL	UC		12	3	15
35	C-203-NA	SCREW, SOCKET HEAD CAP, #2-56 UNC-2A X 0.1875 LONG, FULLY THREADED	Ag-PLATED 300 SSTL	UC		4	1	5
34	C-202-NA	SCREW, SOCKET HEAD CAP, #2-56 UNC-2A X 0.125 LONG, FULLY THREADED	Ag-PLATED 300 SSTL	UC		2	1	3
33	N-440-A	HEX NUT, #4-40	Ag-PLATED 300 SSTL	UC		14	3	17
32	N-832-A	HEX NUT, #8-32	Ag-PLATED 300 SSTL	UC		2	1	3
31	D0902774	LEFT SIDE PLATE	6061 Alloy	UF		1	0	1
30	D0902775	RIGHT SIDE PLATE	6061 Alloy	UF		1	0	1
29	D1000091	BLADE BASE PLATE	6061 Alloy	UF		2	0	2
28	D1000092	BLADE PITCH ADJUSTER	6061 Alloy	UF		2	0	2
27	D1000094	BLADE CLAMP	6061 Alloy	UF		2	0	2
26	D1000098	TOP PLATE	6061 Alloy	UF		1	0	1
25	D1000264	OPTIC HOLDER	6061 Alloy	UF		1	0.5	1.5
24	D1000265	BALANCING BLOCK	6061 Alloy	UF		1	0	1
23	D1000320	TOWER BASE	6061 Alloy	UF		1	0	1
22	D1000398	UPPER OSEM BRACKET	6061 Alloy	UF		1	0	1
21	D1000400	STIFFENER PLATE	6061 Alloy	UF		1	0	1
20	D1000537	BLADE STOP RISER	6061 Alloy	UF		2	0	2
19	D1000538	BLADE STOP CROSS	6061 Alloy	UF		2	0	2
18	D1000539	EARTHQUAKE STOP LOWER LEFT	6061 Alloy	UF		1	0	1
17	D1000540	EARTHQUAKE STOP LOWER RIGHT	6061 Alloy	UF		1	0	1
16	D1000541	UPPER DAMPER BRACKET	6061 Alloy	UF		1	0	1
15	D1000547	LOWER OSEM BRACKET	6061 Alloy	UF		1	0	1
14	D1001211	HAM AUX SUS BLADE TIP ADJUSTMENT FIXTURE	6061 Alloy	UF		2	0	2
13	D1002360	EARTHQUAKE STOP UPPER RIGHT	6061 Alloy	UF		1	0	1
12	D1002361	EARTHQUAKE STOP UPPER LEFT	6061 Alloy	UF		1	0	1
11	D1002369	EDDY CURRENT MAGNET HOLDER	6061 Alloy	UF		2	0	2
10	D1002378	LOWER DAMPER BRACKET	6061 Alloy	UF		1	0	1
9	D1000093	BLADE HINGE PLATE	AISI 304	UF		2	0	2
8	D1000095	BLADE SPRING	AISI 304	UF		2	0	2
7	D1000096	BLADE WIRE CLAMP	AISI 304	UF		2	2	4
6	D1000097	BLADE WIRE BLOCK	AISI 304	UF		2	2	4
5	D1000291	WIRE BLOCK	AISI 304	UF		2	2	4
4	D1000292	WIRE CLAMP	AISI 304	UF		2	2	4
3	D1000474	BALANCE ROD	Copper	UF	10-32 THREAD	1	0.5	1.5
2	VARIES	3 "MIRROR	FUSED SILICA	UF		1	0	1
1	D1100705	SCREW, SOCKET SET, #8-32 UNC-2A X 0.1875 LONG	PEEK	WWW.TECHNIQUEENG.COM		6	2	8

PARTS LIST

DIMENSIONS ARE IN

TOLERANCES:
.XX ±
.XXX ±

ANGULAR ± °

NOTES AND TOLERANCES: (UNLESS OTHERWISE SPECIFIED)
1. INTERPRET DRAWING PER ASME Y14.5-1994.
2. REMOVE ALL SHARP EDGES, R.02 MIN.
3. DO NOT SCALE FROM DRAWING.
4. ALL MACHINING FLUIDS MUST BE FULLY SYNTHETIC, FULLY WATER SOLUBLE AND FREE OF SULFUR, SILICONE, AND CHLORINE.

MATERIAL: N/A
FINISH: N/A µinch

LIGO
UNIVERSITY OF FLORIDA
CALIFORNIA INSTITUTE OF TECHNOLOGY
MASSACHUSETTS INSTITUTE OF TECHNOLOGY

SYSTEM: ADVANCED LIGO
SUB-SYSTEM: IOO
NEXT ASSY:

PART NAME: HAM AUX SUS ASSEMBLY

DESIGNER	L.WILLIAMS	18 MAR 2011	SIZE: D	DWG. NO.: D1000120
DRAFTER				REV.: v10
CHECKER				
APPROVAL			SCALE: 1:2	PROJECTION:

SHEET 1 OF 1

D1000120: ALIGO IO HAM AUX SUS ASSEMBLY, PART PDM REV: X-102, DRAWING PDM REV: X-007