REV.	DATE	DCN #	DRAWING TREE #
v2	02 JUN 2010	E1100216	E1000640
v2	09 MAY 20111	E1100335	

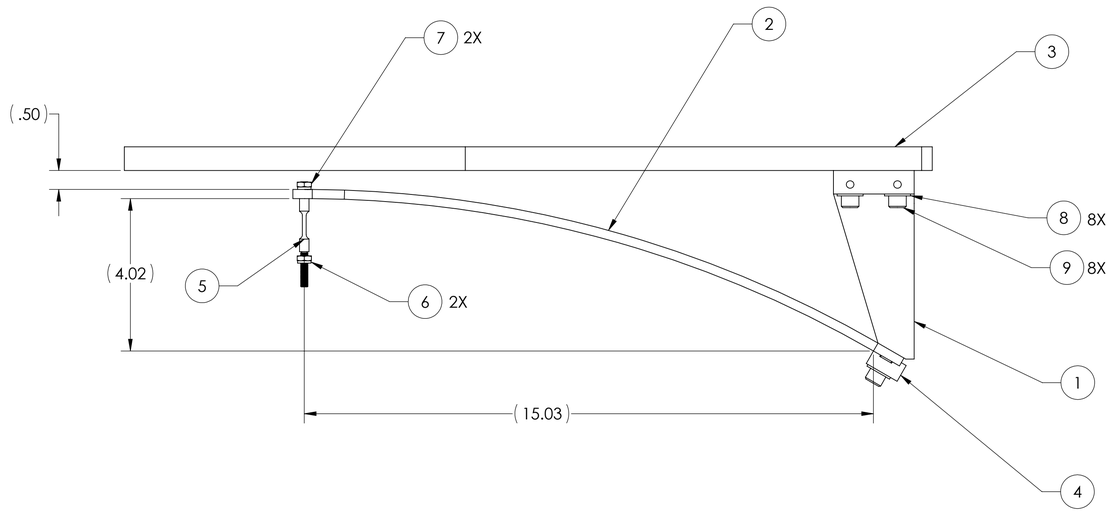

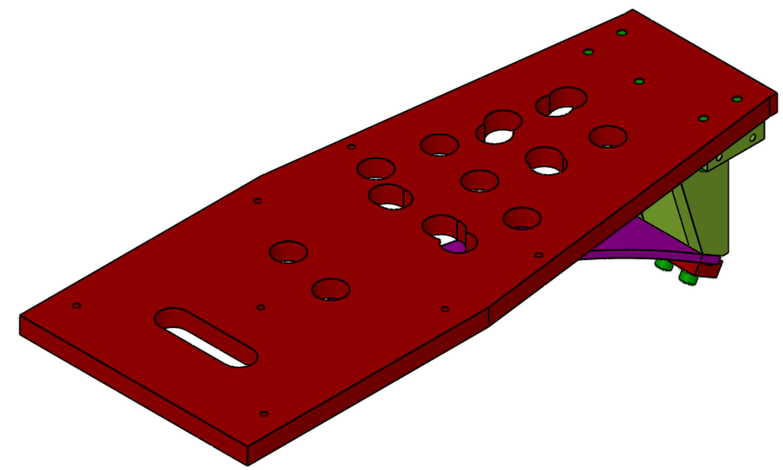

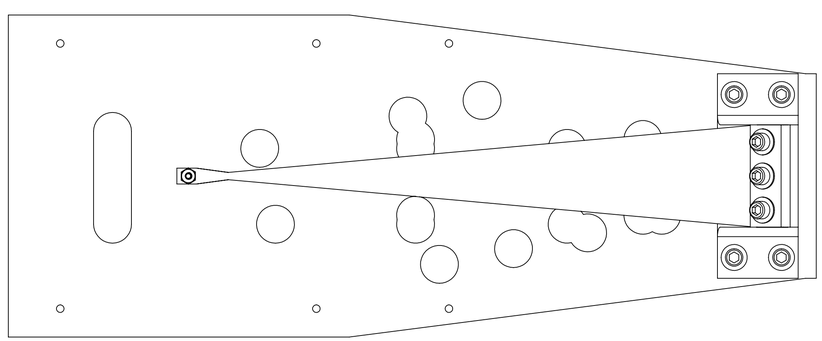

ITEM NO.	PART NUMBER	DESCRIPTION	MATERIAL	REQ	SPARE	TOTAL
9	C-1820-NA	SCREW, SOCKET HEAD CAP, 5/16-18 UNC-2A X 1.25 L, UC COMP	Ag18-8 SSTL	8	4	12
8	98019A385	FLAT WASHER #5/16, McMaster	300 SSTL	8	4	12
7	N-1032-A	HEX NUT, #10-32, UC COMP.	Ag 18-8 SSTL	2	1	3
6	90313A200	WASHER, FLAT, #10 ,McMASTER	18-8 SSTL	2	1	3
5	D1002340	SLC ACB SUSPENSION ROD	316 SSTL	1	1	2
4	D1002844	SLC ACB BLADE CLAMP	304 SSTL	1		1
3	D1001138	SLC ACB INTERFACE MTG PLATE	304 SSTL	1		1
2	D1002608	SLC ACB SUSPENSION BLADE	MARAGING STEEL C250	1		1
1	D1002609	SLC BLADE MOUNTING BRACKET	304 SSTL	1		1

PARTS LIST

NOTES AND TOLERANCES: (UNLESS OTHERWISE SPECIFIED)

DIMENSIONS ARE IN INCHES

TOLERANCES:
.XX ± .03
.XXX ± .010

ANGULAR ± 0.5°

1. INTERPRET DRAWING PER ASME Y14.5-1994.
2. REMOVE ALL SHARP EDGES, R.02 MIN.
3. DO NOT SCALE FROM DRAWING.
4. ALL MACHINING FLUIDS MUST BE FULLY SYNTHETIC, FULLY WATER SOLUBLE AND FREE OF SULFUR, SILICONE, AND CHLORINE.

MATERIAL: N/A

FINISH: N/A µinch

LIGO — CALIFORNIA INSTITUTE OF TECHNOLOGY, MASSACHUSETTS INSTITUTE OF TECHNOLOGY

SYSTEM: ADVANCED LIGO

SUB-SYSTEM: AOS

NEXT ASSY: D1001011

PART NAME: ARM CAVITY BAFFLE BLADE ASSY

DESIGNER	N.Nguyen	20 Aug 2010	SIZE: D	DWG. NO.: D1001005
DRAFTER	TQ. NGUYEN	28 MAY 2010		REV.: v2
CHECKER	M. SMITH	10 NOV 2010		
APPROVAL	D. COYNE	20 NOV 2010	SCALE: 1:1	PROJECTION: SHEET 1 OF 1

D1001005_AdLIGO_AOS_SLC ARM Cavity Baffle Blade Assy, PART PDM REV: X-049, DRAWING PDM REV: X-019