NOTES CONTINUED:

(5) SCRIBE, ENGRAVE, OR MECHANICALLY STAMP (NO INKS OR DYES) DRAWING PART NUMBER, REVISION (AND VARIANT OR "TYPE" IF APPLICABLE) ON NOTED SURFACE OF PART FOLLOWED ON THE NEXT LINE WITH A THREE DIGIT SERIAL NUMBER. SERIAL NUMBERS START AT 001 FOR THE FIRST ARTICLE AND PROCEED CONSECUTIVELY. USE MINIMUM 0.12" HIGH CHARACTERS, UNLESS THE SIZE OF THE PART DICTATES SMALLER CHARACTERS. A VIBRATORY TOOL MAY BE USED. EXAMPLE: DXXXXXXX-VY, TYPE-XX, S/N XXX

6. ALL PARTS SHALL BE MANUFACTURED IN ACCORDANCE WITH LIGO SPECIFICATION E0900364.

REV.	DATE	DCN #	DRAWING TREE #
V1	26 JUL 2010	E1000270	
V2	24 SEPT 2010	E1000407	

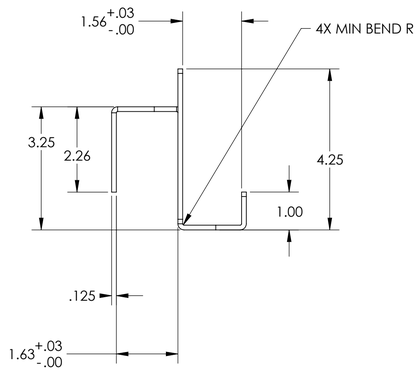

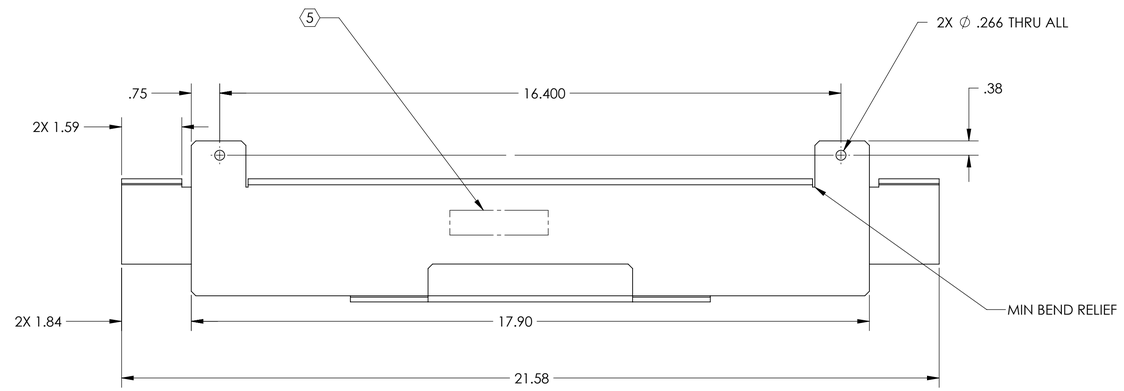

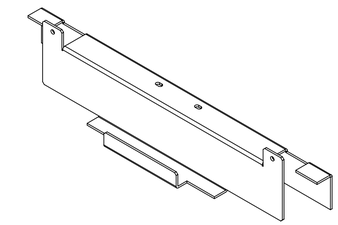

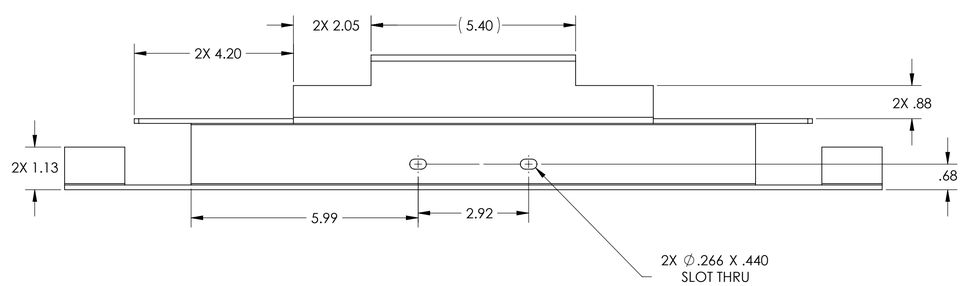

SEE SHEET 2 FOR FLAT PATTERN

NOTES AND TOLERANCES: (UNLESS OTHERWISE SPECIFIED)			
DIMENSIONS ARE IN INCHES TOLERANCES: .XX ± .03 .XXX ± .010 ANGULAR ± 0.5°	1. INTERPRET DRAWING PER ASME Y14.5-1994. 2. REMOVE ALL SHARP EDGES, R.02 MIN. 3. DO NOT SCALE FROM DRAWING. 4. ALL MACHINING FLUIDS MUST BE FULLY SYNTHETIC, FULLY WATER SOLUBLE AND FREE OF SULFUR, SILICONE, AND CHLORINE.		
	MATERIAL: 304 SSTL	FINISH: 63 µinch	

LIGO CALIFORNIA INSTITUTE OF TECHNOLOGY MASSACHUSETTS INSTITUTE OF TECHNOLOGY

SYSTEM	SUB-SYSTEM
ADVANCED LIGO	SUS
NEXT ASSY: D1001664	

PART NAME: OMC BRACKET, HAM STRUCTURE LIFT

DESIGNER	K. BUCKLAND	1 JUN 2010	SIZE: D	DWG. NO.: D1001792	REV.: v2
DRAFTER	K. BUCKLAND	26 JUL 2010			
CHECKER					
APPROVAL			SCALE: 1:2	PROJECTION:	SHEET 1 OF 2

D1001792 OMC BRACKET, HAM STRUCTURE LIFT, aLIGO, SUS, PART PDM, REV: X-010, DRAWING PDM, REV: X-006

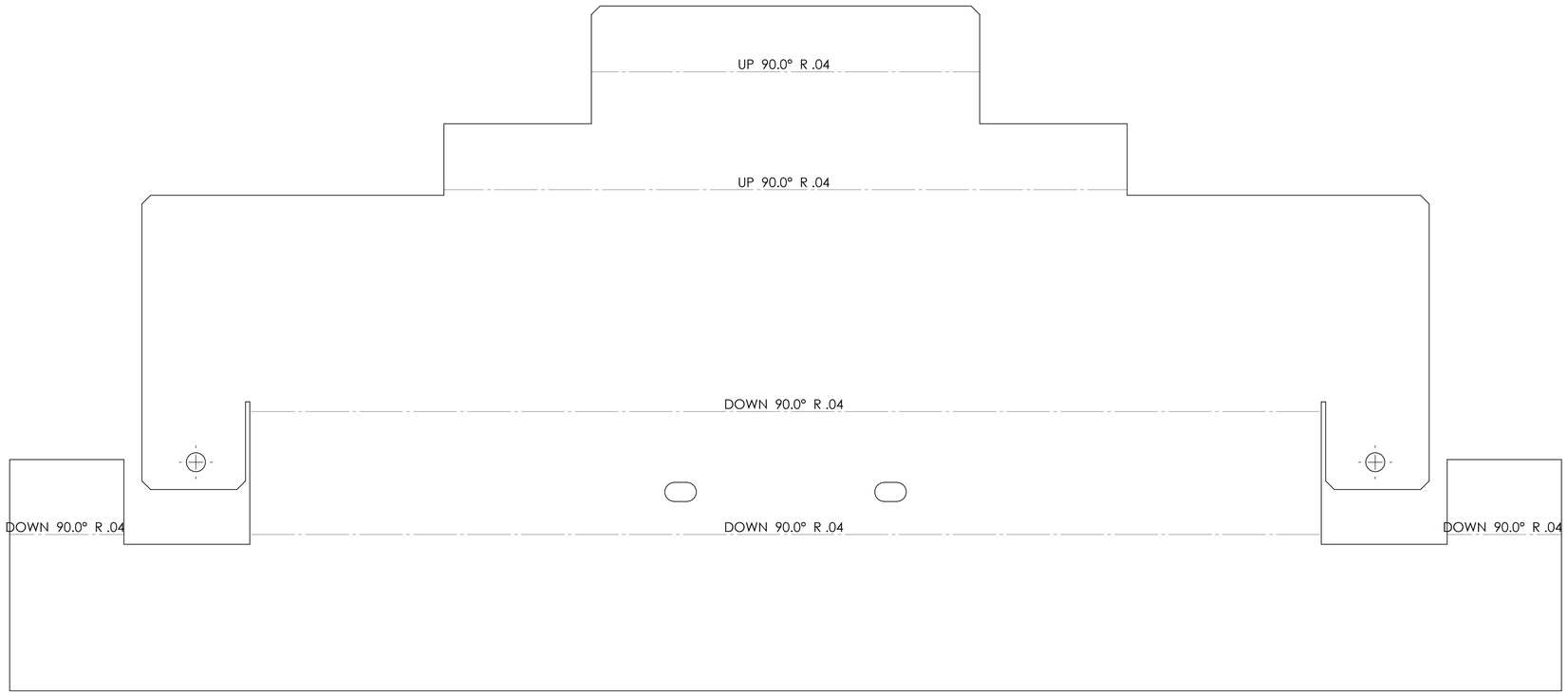

FLAT PATTERN

LIGO	CALIFORNIA INSTITUTE OF TECHNOLOGY MASSACHUSETTS INSTITUTE OF TECHNOLOGY	
SIZE D	DWG. NO. D1001792	REV. v2
SCALE: 1:2	PROJECTION:	SHEET 2 OF 2

D1001792 OMC BRACKET, HAM STRUCTURE LIFT, aLIGO, SUS, PART PDM, REV: X-010, DRAWING PDM, REV: X-006