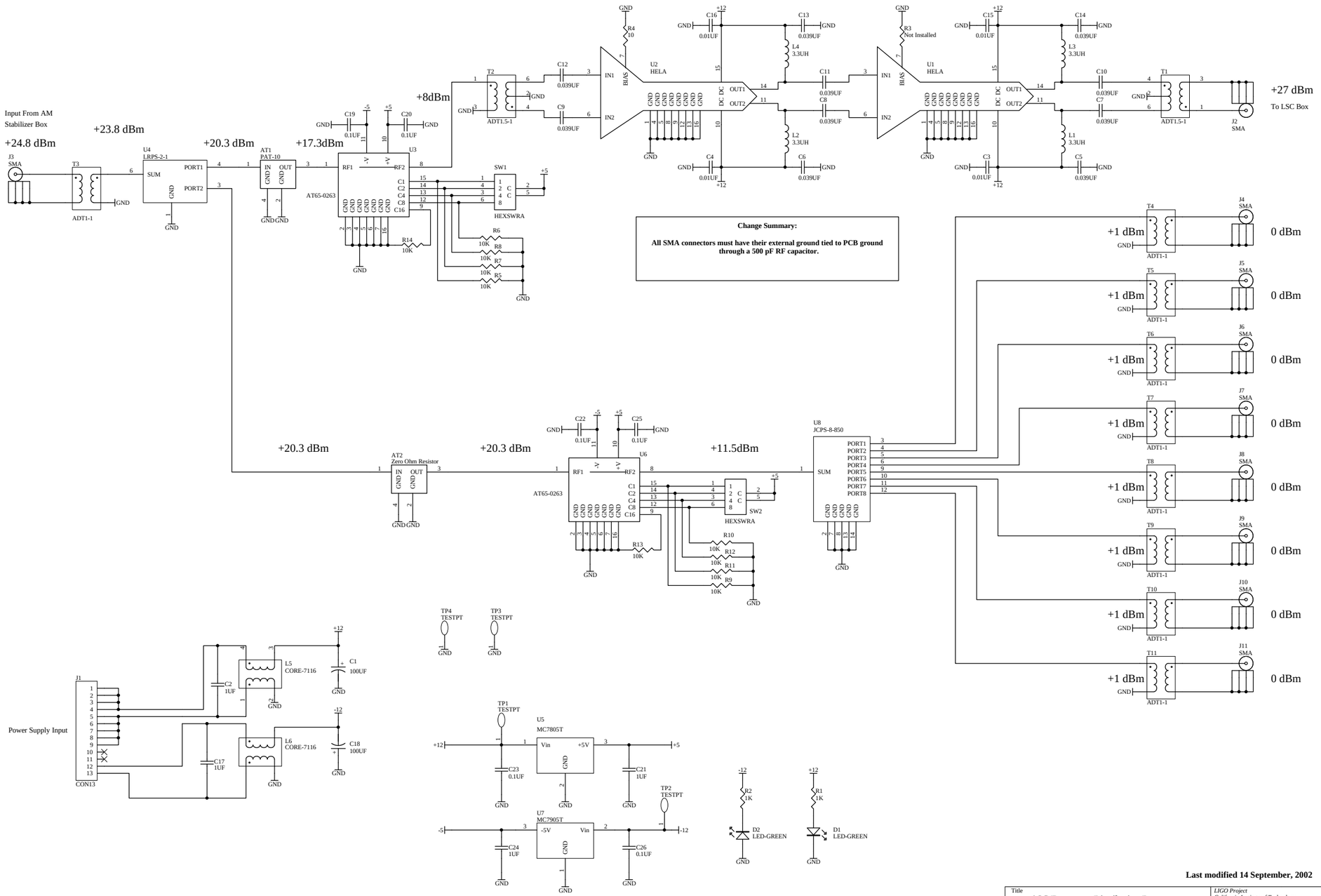
Input From AM Stabilizer Box
+24.8 dBm
+23.8 dBm
+20.3 dBm
+17.3dBm
+8dBm
+27 dBm
To LSC Box
+20.3 dBm
+20.3 dBm
+11.5dBm
+1 dBm
0 dBm
Power Supply Input
Change Summary:
All SMA connectors must have their external ground tied to PCB ground through a 500 pF RF capacitor.
Last modified 14 September, 2002
ASC Frequency Distribution Box
LIGO Project
California Institute of Technology
Massachusetts Institute of Technology
Size: C
Number: D000095
Revision: A
Engineer: Abbott
File: C:\Rich's Files\Mycadfiles\freqdist\AscBoxsch.dwg
Date: 13-Sep-2001
Time: 16:33:05
Sheet 1 of 1
LIGO