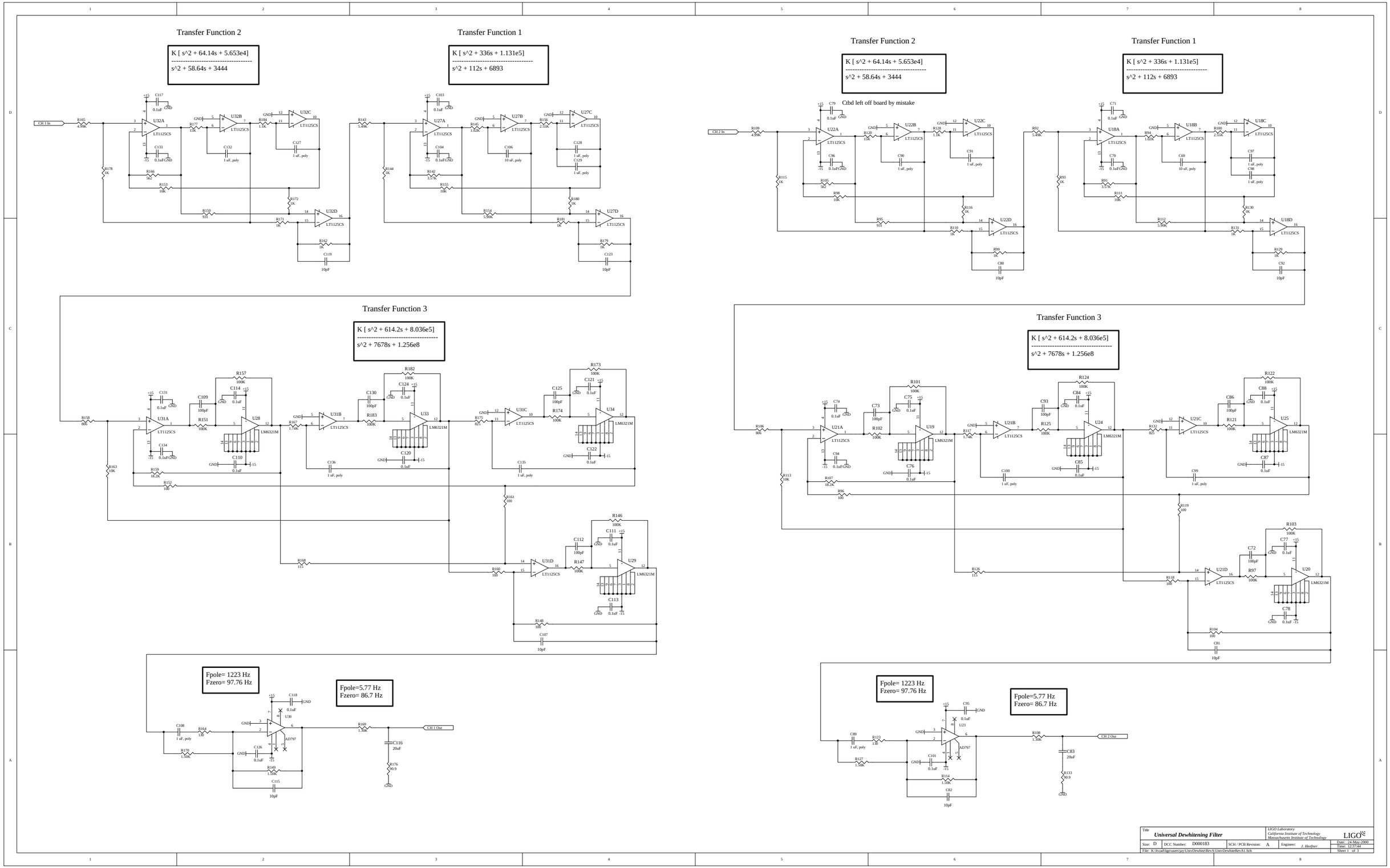
Transfer Function 2
K [s^2 + 64.14s + 5.653e4]
s^2 + 58.64s + 3444
Transfer Function 1
K [s^2 + 336s + 1.131e5]
s^2 + 112s + 6893
Transfer Function 3
K [s^2 + 614.2s + 8.036e5]
s^2 + 7678s + 1.256e8
Fpole= 1223 Hz
Fzero= 97.76 Hz
Fpole=5.77 Hz
Fzero= 86.7 Hz
CH 1 In
CH 1 Out
Transfer Function 2
K [s^2 + 64.14s + 5.653e4]
s^2 + 58.64s + 3444
Ctbd left off board by mistake
Transfer Function 1
K [s^2 + 336s + 1.131e5]
s^2 + 112s + 6893
Transfer Function 3
K [s^2 + 614.2s + 8.036e5]
s^2 + 7678s + 1.256e8
Fpole= 1223 Hz
Fzero= 97.76 Hz
Fpole=5.77 Hz
Fzero= 86.7 Hz
CH 2 In
CH 2 Out
Title
Universal Dewhitening Filter
LIGO Laboratory
California Institute of Technology
Massachusetts Institute of Technology
LIGO
Size: D
DCC Number: D000183
SCH / PCB Revision: A
Engineer: J. Heefner
Date: 24-May-2000
Time: 12:37:44
Sheet 1 of 3

Transfer Function 2

K [s^2 + 64.14s + 5.653e4]
---
s^2 + 58.64s + 3444

Transfer Function 1

K [s^2 + 336s + 1.131e5]
---
s^2 + 112s + 6893

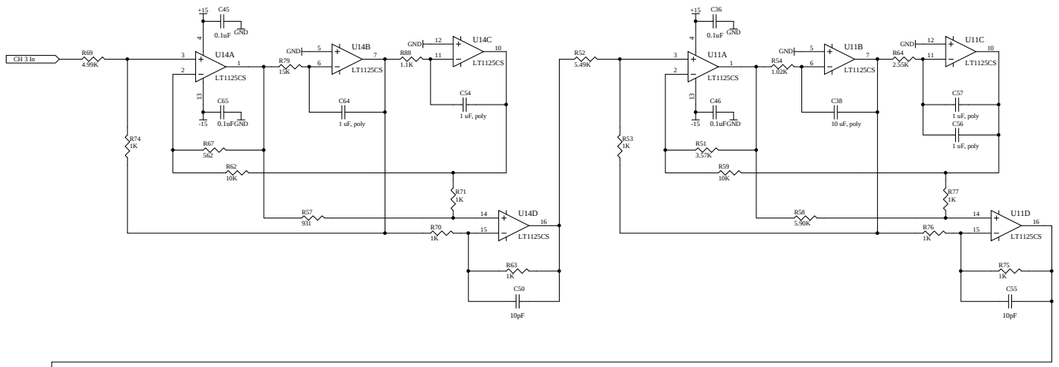

Transfer Function 3

K [s^2 + 614.2s + 8.036e5]
---
s^2 + 7678s + 1.256e8

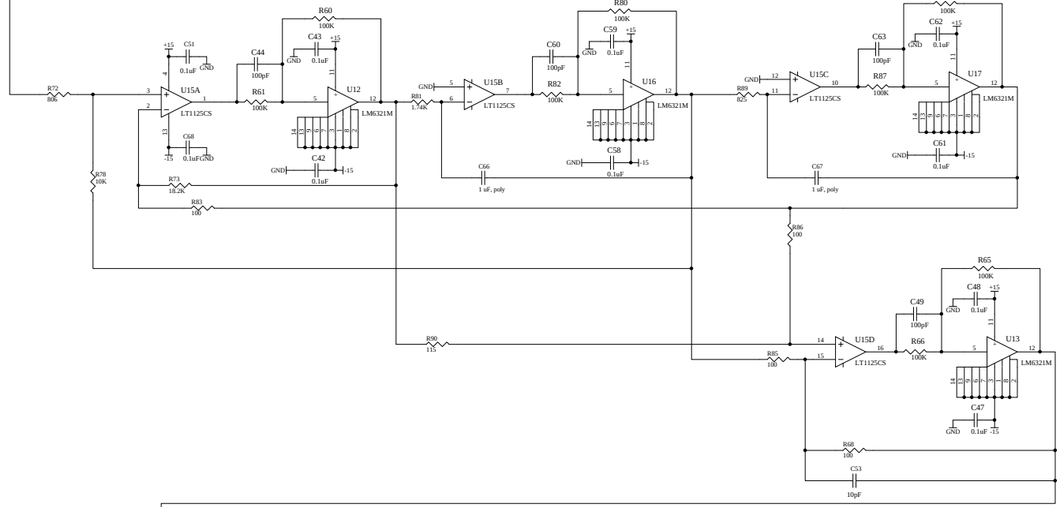

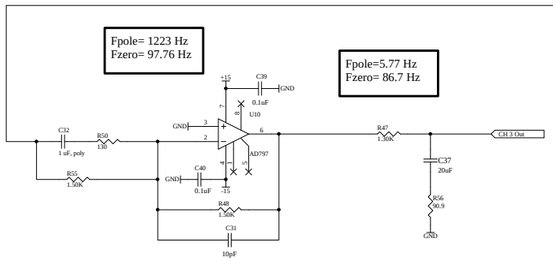

Transfer Function 2

K [s^2 + 64.14s + 5.653e4]
---
s^2 + 58.64s + 3444

Ctbd left off board by mistake

Transfer Function 1

K [s^2 + 336s + 1.131e5]
---
s^2 + 112s + 6893

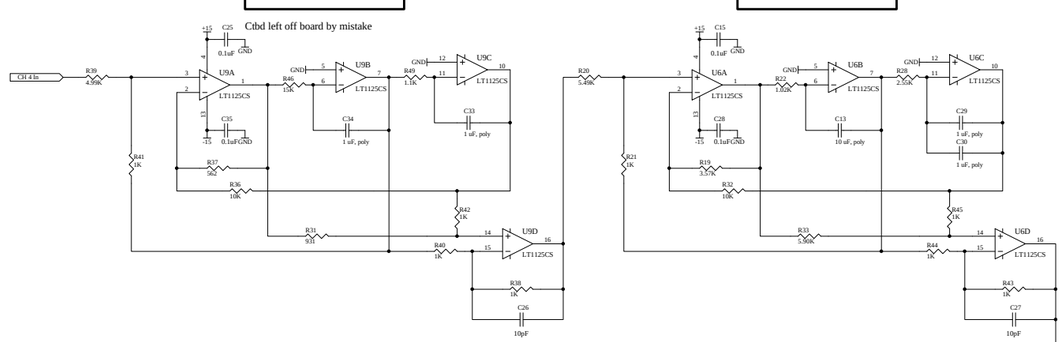

Transfer Function 3

K [s^2 + 614.2s + 8.036e5]
---
s^2 + 7678s + 1.256e8

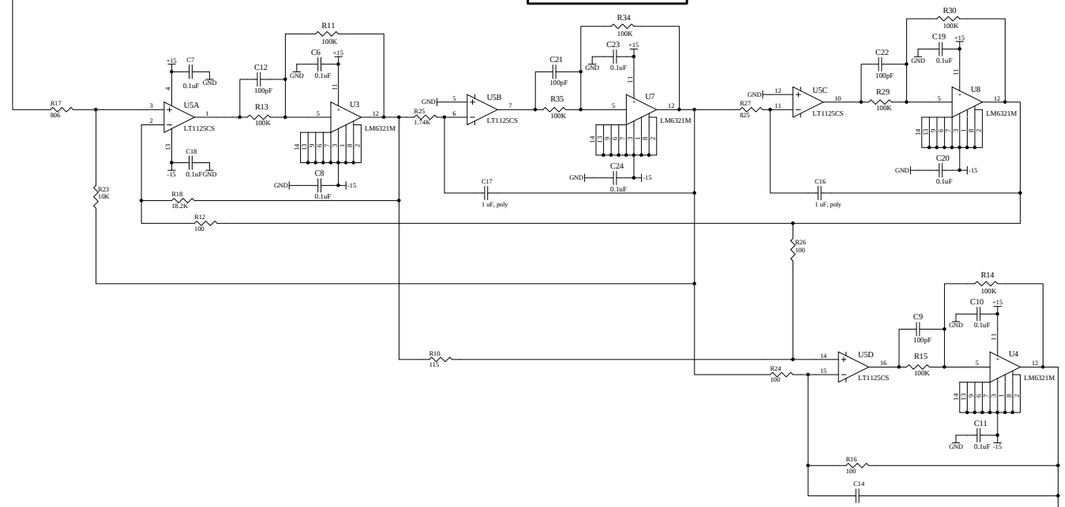

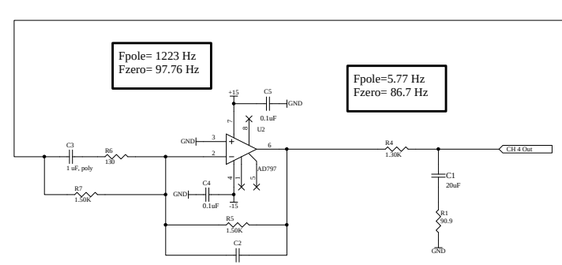

Title: *Universal Dewhitening Filter*			*LIGO Laboratory* *California Institute of Technology* *Massachusetts Institute of Technology*		LIGO
Size: D	DCC Number: D000183	SCH / PCB Revision: A	Engineer: *J. Heefner*	Date: 24-May-2000	
File: JC:\lisrad\lig\users\jay\Unix\Dewhite\RevA\UnixDewhiteRevA2.Sch				Time: 12:37:51	
				Sheet 2 of 3	

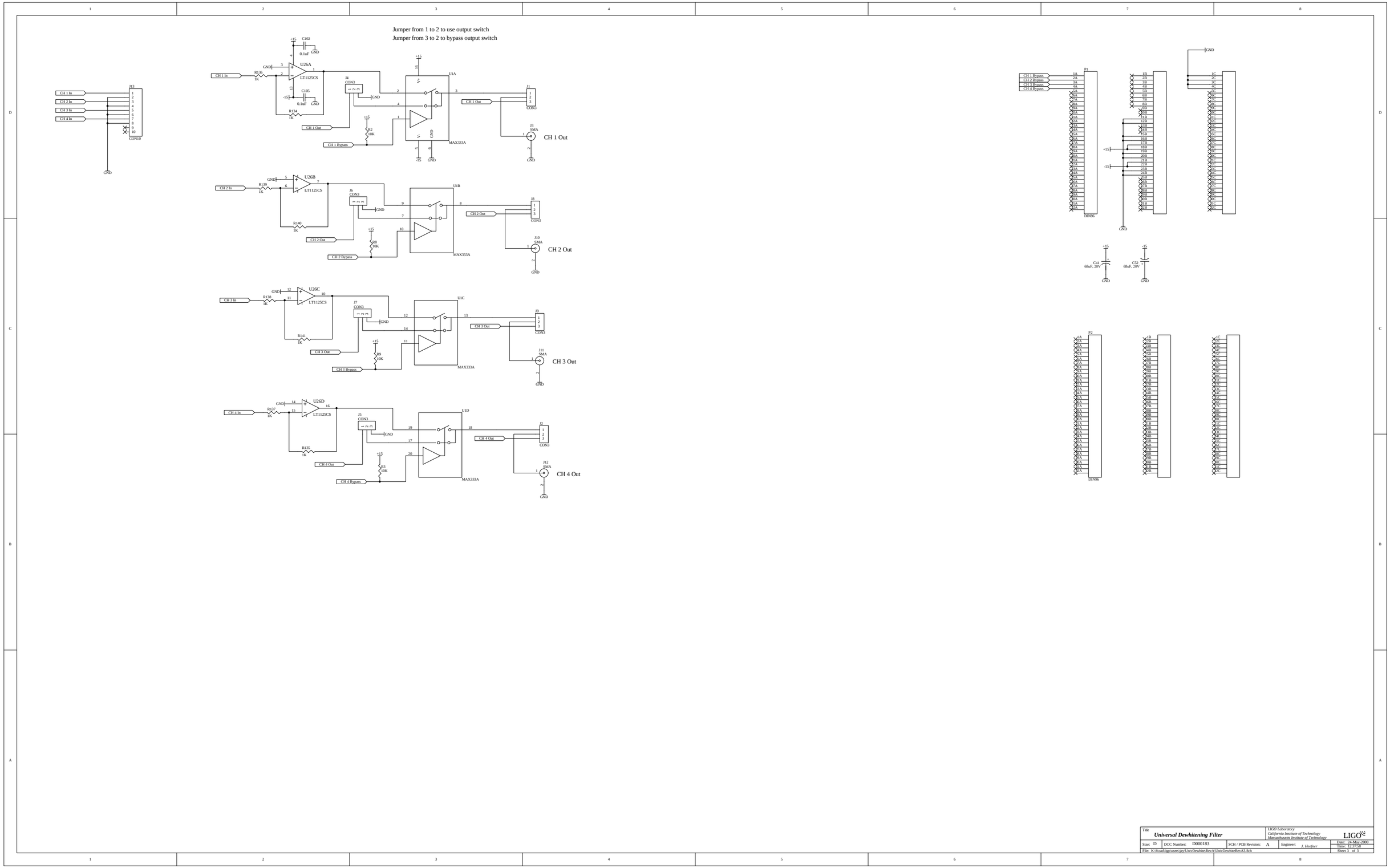

Title: **Universal Dewhitening Filter**			LIGO Laboratory California Institute of Technology Massachusetts Institute of Technology	LIGO
Size: D	DCC Number: D000183	SCH / PCB Revision: A	Engineer: J. Heefner	Date: 24-May-2000 Time: 12:37:58
File: K:\h\cad\ligo\users\jay\UnivDewhiteRevA\UnivDewhiteRevA3.Sch				Sheet 3 of 3

UnivDewhiteRevA1
UnivDewhiteRevA1.Sch

- CH 1 In
- CH 1 Out
- CH 2 In
- CH 2 Out

UnivDewhiteRevA2
UnivDewhiteRevA2.Sch

- CH 3 In
- CH 3 Out
- CH 4 In
- CH 4 Out

UnivDewhiteRevA3
UnivDewhiteRevA3.Sch

- CH 1 Out
- CH 1 In
- CH 2 In
- CH 3 In
- CH 4 In
- CH 1 Bypass
- CH 1 In
- CH 1 Out
- CH 2 Out
- CH 2 Bypass
- CH 2 In
- CH 2 Out
- CH 3 Out
- CH 3 Bypass
- CH 3 In
- CH 3 Out
- CH 4 Out
- CH 4 Bypass
- CH 4 In
- CH 4 Out
- CH 1 Bypass
- CH 2 Bypass
- CH 3 Bypass
- CH 4 Bypass

Title
Universal Dewhitening Filter

LIGO Laboratory
California Institute of Technology
Massachusetts Institute of Technology

LIGO

Size: B	DCC Number: D000183	SCH / PCB Revision: A	Engineer: *J. Heefner*	Date: 24-May-2000
File: K:\h\cad\ligo\users\jay\UnivDewhite\RevA\UnivDewhiteRevA.prj				Time: 12:37:34
				Sheet 0 of 3