Transfer Function

2 BW poles @ 7Hz, 2 BW zeros @50Hz

0.023 [s^2 + 444.1s + 98596]
---
s^2 + 62.2s + 1932

Jumper 1 to 2 to use stage
Jumper 2 to 3 to bypass stage

Transfer Function

2 BW poles @ 7Hz, 2 BW zeros @50Hz

0.023 [s^2 + 444.1s + 98596]
---
s^2 + 62.2s + 1932

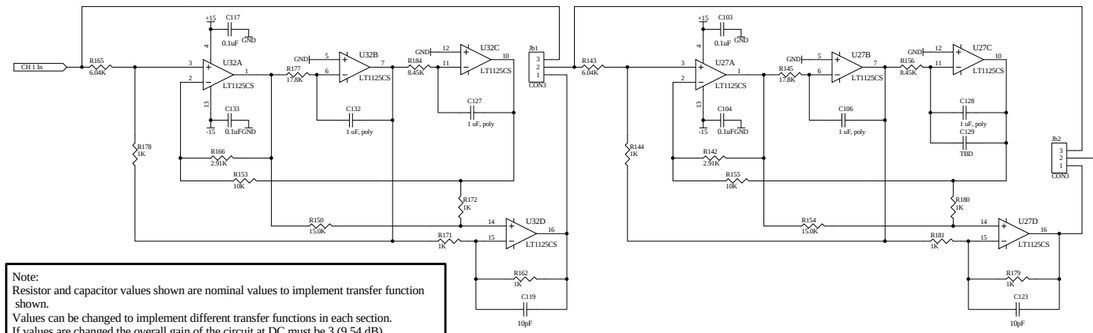

Note:
Resistor and capacitor values shown are nominal values to implement transfer function shown.
Values can be changed to implement different transfer functions in each section.
If values are changed the overall gain of the circuit at DC must be 3 (9.54 dB).

Transfer Function

2 BW poles @ 7Hz, 2 BW zeros @50Hz

0.023 [s^2 + 444.1s + 98596]
---
s^2 + 62.2s + 1932

Jumper 1 to 2 to use stage
Jumper 2 to 3 to bypass stage

Transfer Function

2 BW poles @ 7Hz, 2 BW zeros @50Hz

0.023 [s^2 + 444.1s + 98596]
---
s^2 + 62.2s + 1932

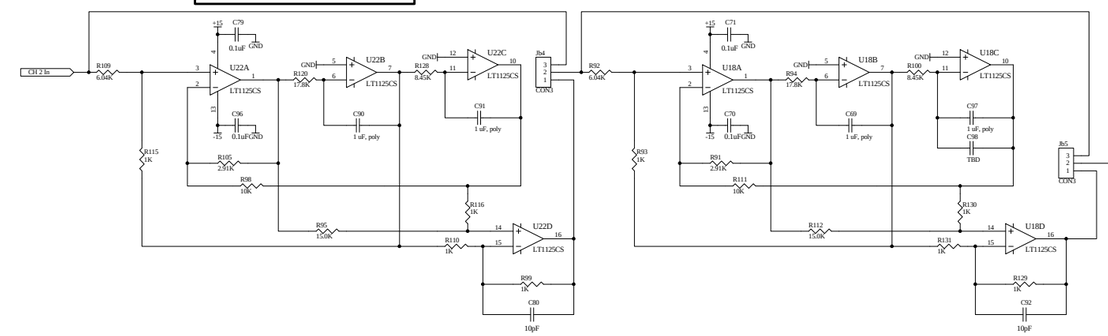

Note: These components not stuffed in B1 Butterworth Version

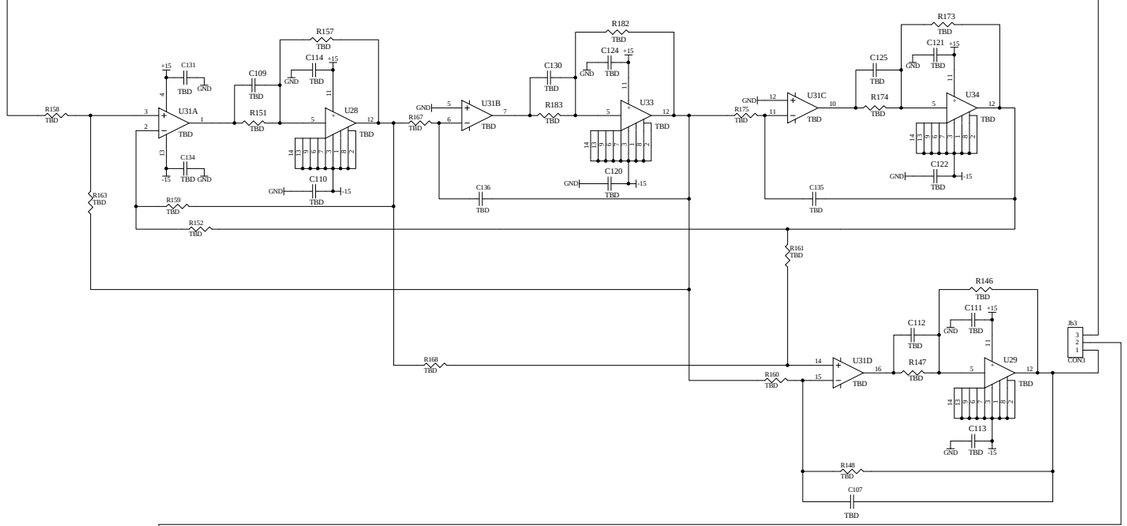

Note: These components not stuffed in B1 Butterworth Version

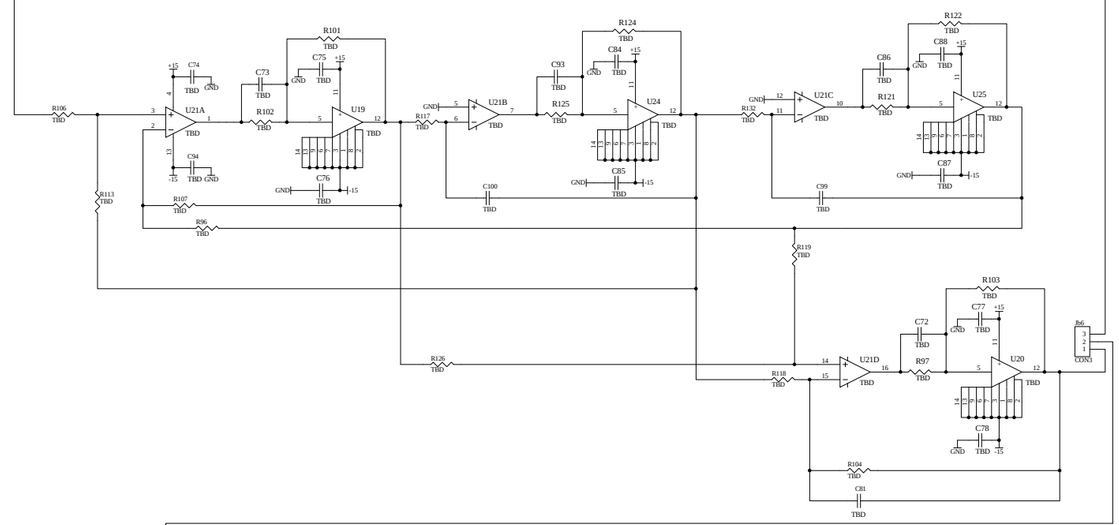

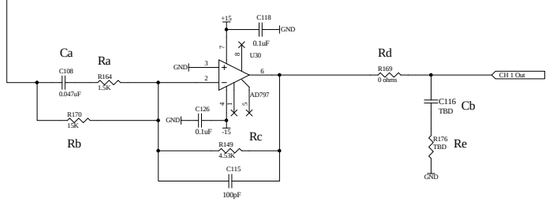

DC gain=3, Pole @ 2500, Zero @ 250 Hz

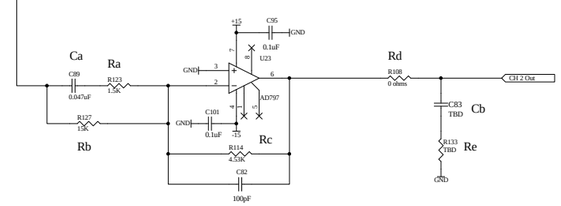

DC gain=3, Pole @ 2500, Zero @ 250 Hz

Title: *Universal Dewhitening Filter*		LIGO Laboratory, California Institute of Technology, Massachusetts Institute of Technology	LIGO
Size: D	DCC Number: D000183	SCH / PCB Revision: B7/B	Engineer: *J. Heefner*
File: E:\Excad\jg\users\jay\Univ\Dewhite\Rev B7\Univ\Dewhite\RevB7v1.Sch			Date: 6-Feb-2003 / Time: 14:59:08 / Sheet 1 of 3

Transfer Function

2 BW poles @ 7Hz, 2 BW zeros @50Hz

0.023 [s^2 + 444.1s + 98596]
---
s^2 + 62.2s + 1932

Jumper 1 to 2 to use stage
Jumper 2 to 3 to bypass stage

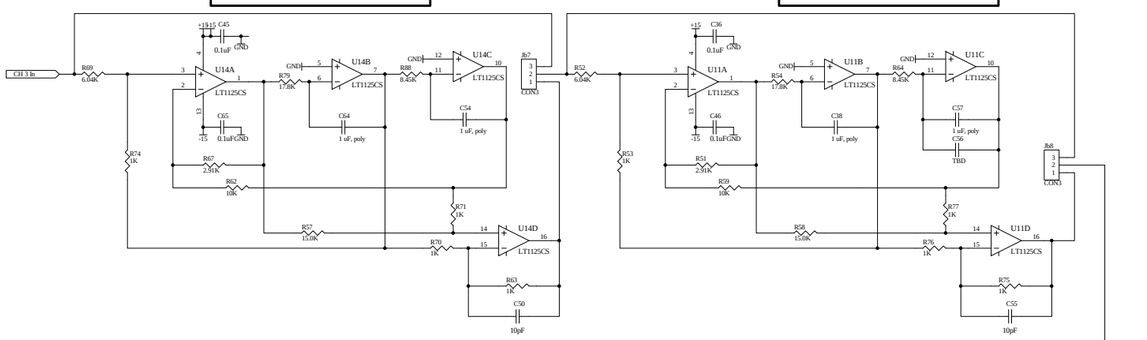

Transfer Function

2 BW poles @ 7Hz, 2 BW zeros @50Hz

0.023 [s^2 + 444.1s + 98596]
---
s^2 + 62.2s + 1932

Transfer Function

2 BW poles @ 7Hz, 2 BW zeros @50Hz

0.023 [s^2 + 444.1s + 98596]
---
s^2 + 62.2s + 1932

Jumper 1 to 2 to use stage
Jumper 2 to 3 to bypass stage

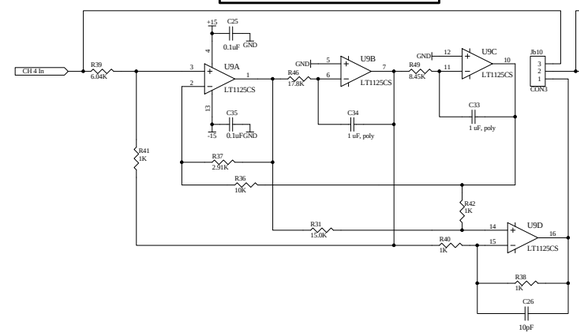

Transfer Function

2 BW poles @ 7Hz, 2 BW zeros @50Hz

0.023 [s^2 + 444.1s + 98596]
---
s^2 + 62.2s + 1932

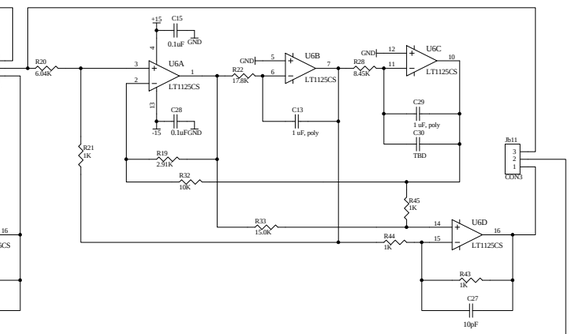

Note: These components not stuffed in B1 Butterworth Version

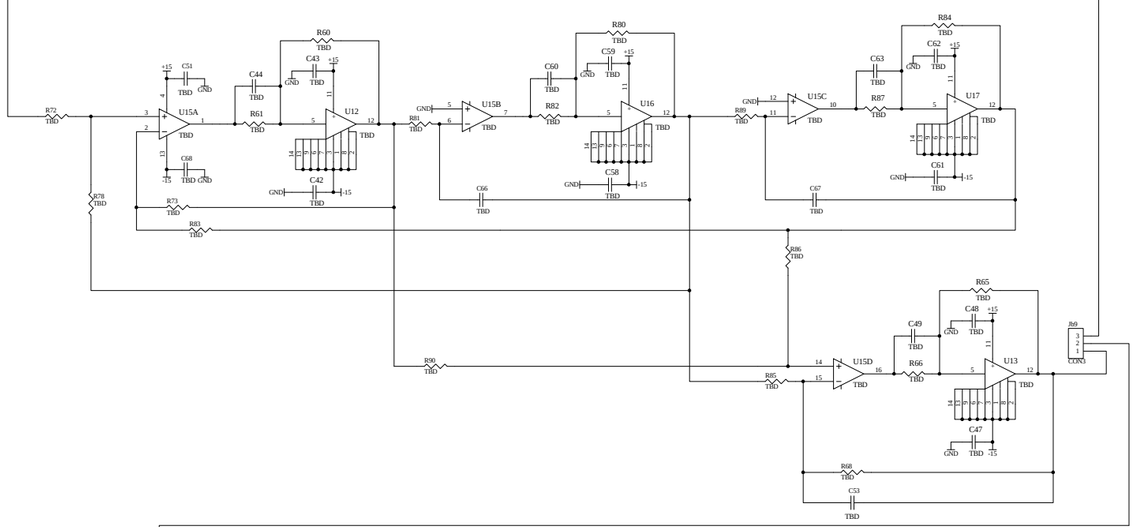

Note: These components not stuffed in B1 Butterworth Version

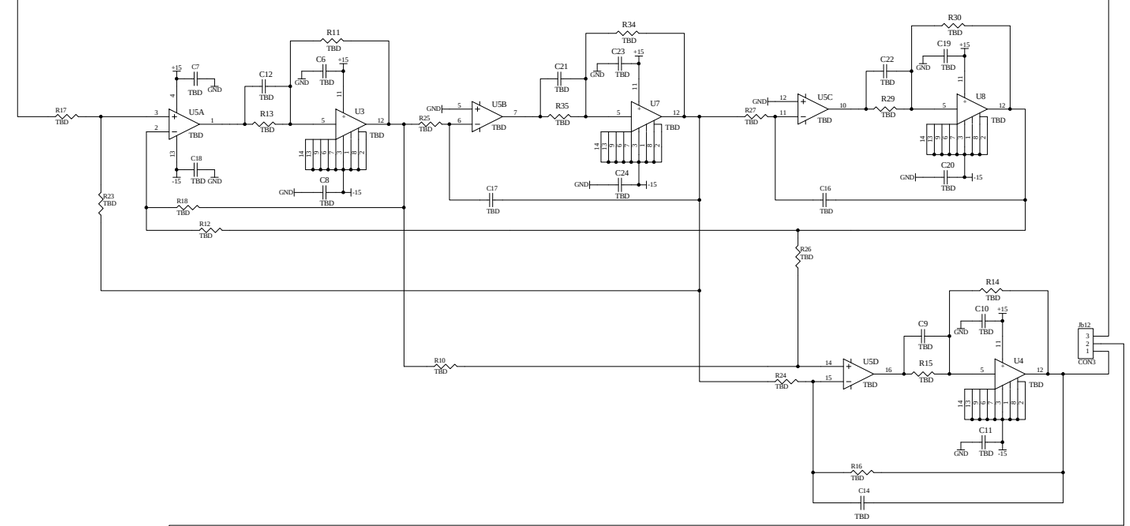

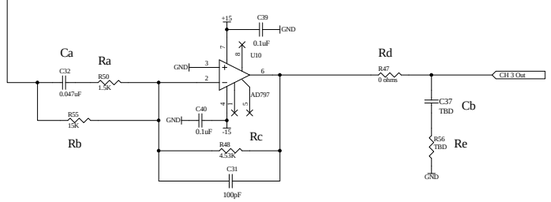

DC gain=3, Pole @ 2500, Zero @ 250 Hz

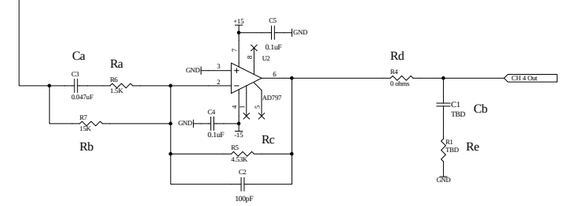

DC gain=3, Pole @ 2500, Zero @ 250 Hz

Title: *Universal Dewhitening Filter*			LIGO Laboratory, California Institute of Technology, Massachusetts Institute of Technology		LIGO
Size: D	DCC Number: D000183	SCH / PCB Revision: B7/B	Engineer: *J. Heefner*	Date: 6-Feb-2003	
				Time: 14:59:13	
File: J:\ligo\cad\jig\users\jay\Univ\Dewhite\Rev B7\Univ\Dewhite\rev B7-S2.Sch				Sheet 2 of 3	

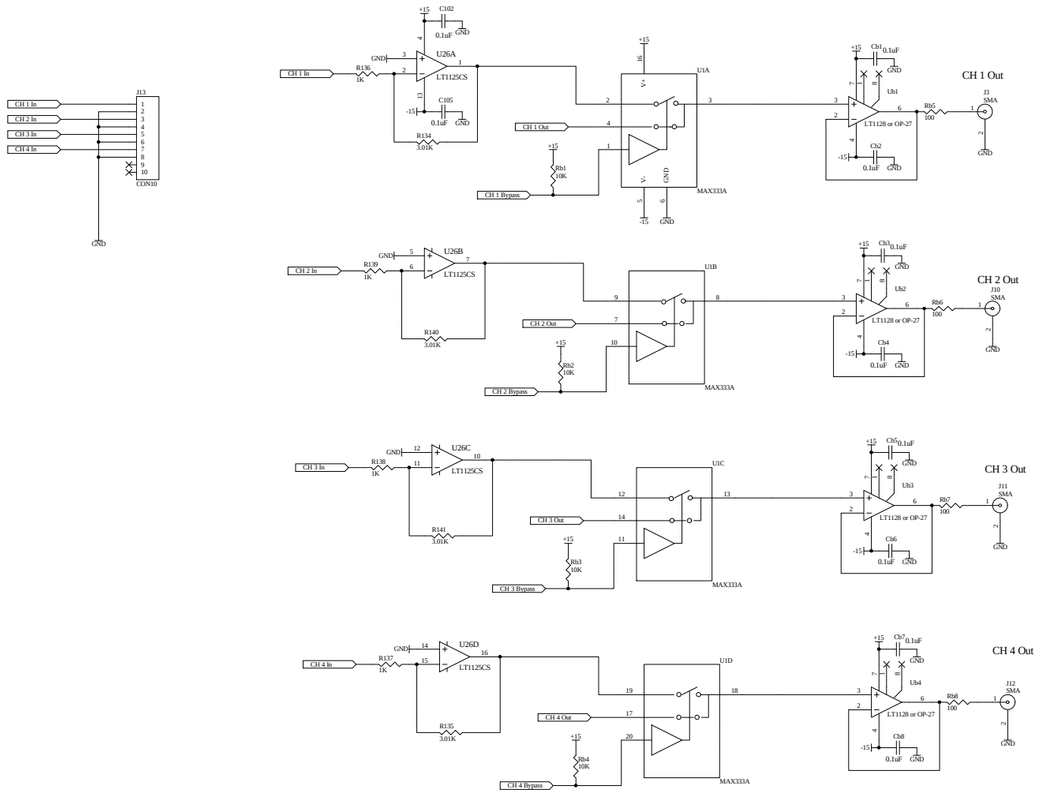

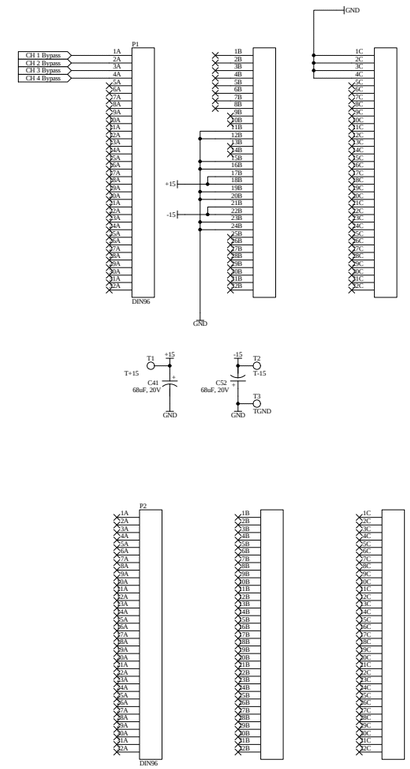

Revision	Description of Change	Date
A	Initial release	5/00
A1	1. Added note about RevA1 upgrade board. 2. Changed R134, R135, R140, R141 to 3.01K	1/01
B	1. Added jumpers JbX to selectively jumper individual filter sections. 2. Added output buffer amps UbX to each channel. 3. All components added for Rev B have a "b" in the designator. 4. Removed output jumpers J1, J2, J4, J5, J6, J7, J8, J9. 5. Added test points for power connection.	3/01
B1/B2	1. Changed componet values to have two sections w/ 2 ea butterworth poles at 30 Hz and 2 ea. butterworth zeros at 100 Hz to allow for easier lock acquisition of IFO.	4/01
B3	1. Changed AD829 to LT1128 or OP27 (Ub1, Ub2, Ub3, Ub4) 2. Changed components to make 2 poles @ 15Hz, 2 zeros @ 75Hz.	6/02
B4	1. Changed R4, R47, R108, R169 to 158K. 2. Changed C1, C37, C83, C116 to 10uF. 3. Changed R1, R56, R133, R176 to 3.16K. This puts a 0.1 Hz pole and 5 Hz zero in the output of each channel.	7/02
B5	1. Rev B5 is a change to Rev B3 with poles at 15Hz and zeros at 100Hz. 2. Changed R69, R52, R39, R20, R165, R143, R109, R92 to 6.49K 3. Changed R67, R51, R37, R19, R166, R142, R105, R91 to 3.24K 4. Changed R79, R54, R46, R22, R177, R145, R120, R94 to 8.66K 5. Changed R88, R64, R49, R28, R184, R156, R128, R100 to 4.22K 6. Changed R57, R58, R31, R33, R150, R154, R95, R112 to 14.3K	9/02
B6	Rev B6 On some channels the values in the output stages have been changed to the following: Ra = 2.37K Rb = 23.7K Rc = 71.5K Rd = 22K Re = 3.24K Ca = 0.22uF Cb = 1 uF This adds poles at 7Hz, and 3.05KHz and zeros at 50Hz and 305Hz with a DC gain of 9.6dB.	1/03
B7	1. Rev B7 has two sections each with poles @ 7 and 7Hz, zero at 50 and 50 Hz. The output stage has a DC gain of 3 with a zero at 250 Hz and pole at 2500 Hz. 2. This revision of the module is used for the MC2 output at LLO and the 40 Meter.	2/03

Title: *Universal Dewhitening Filter*		*LIGO Laboratory* *California Institute of Technology* *Massachusetts Institute of Technology*	LIGO
Size: D	DCC Number: D000183	SCH / PCB Revision: B7/B	Engineer: *J. Heefner*
File: E:\Ecad\jig\users\jay\Univ\Dewhite\Rev B7\Univ\Dewhite\RevB7\A3.Sch			Date: 6-Feb-2003 Time: 14:59:19 Sheet 3 of 3