NOTES: (UNLESS OTHERWISE SPECIFIED)

Contaminant Hydrocarbon ubricants
Liquids containing hydrocarbons or other contaminants, other than the machining fluids specified herein, shall not be allowed to come into contact with suspension material at any time. All machining fluids shall be water soluble and free of sulfur, chlorine and silicone; such as Cincinnati Milacron's Cimtech 410 (stainless steel).

Identification Number
A serial number shall be etched, or scribed on the part see note drawing note.

Serial Number Format
The Serial number shall be of the format:
D99xxxx-x - (()

Example: D990021-A-001
The drawing number, The revision number, The sequential part number

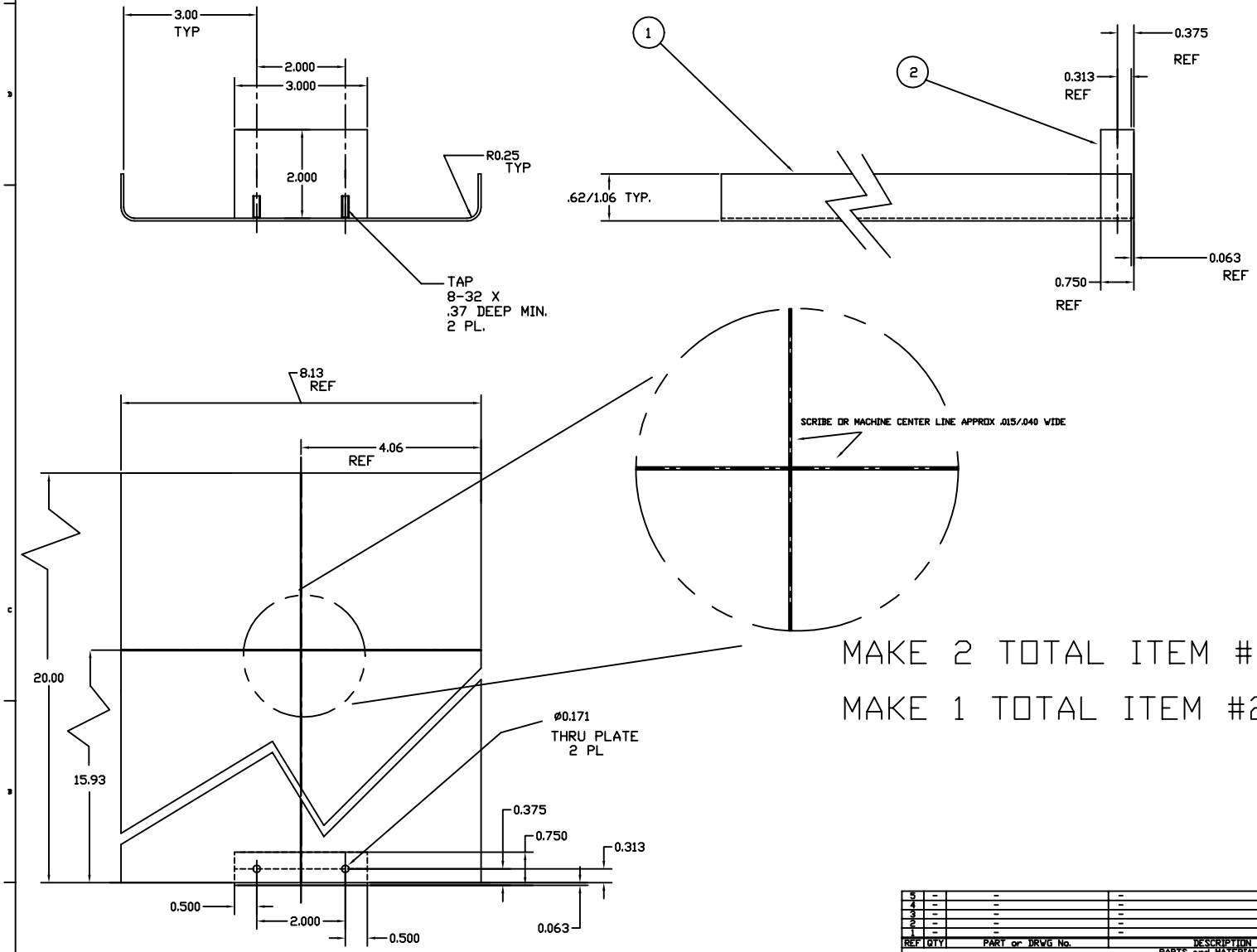

MAKE 2 TOTAL ITEM #1

MAKE 1 TOTAL ITEM #2

REF	QTY	PART or DRWG No.	DESCRIPTION	MATERIAL
5	-	-	-	-
4	-	-	-	-
3	-	-	-	-
2	-	-	-	-
1	-	-	-	-

PARTS and MATERIAL LIST

DWG. NO.	DESCRIPTION
XXX	XXX

REFERENCE DRAWINGS

UNLESS OTHERWISE SPECIFIED
DIMENSIONS ARE IN INCHES

TOLERANCES:
FRACTIONAL ± ---
ANGULAR ±
ANGULARMACH ± — BEND ± —
TWO PLACE DECIMAL ± .02
THREE PLACE DECIMAL ± .008
FINISHED SURFACE RMS 63
BREAK CORNERS IN - OUT-
REMOVE ALL BURRS

MATERIAL:	HEAT TREAT:	FINISH:
ALUMINUM	/	None

USED ON: XXX | NEXT ASS'Y: XXX

REV	DESCRIPTION	DCN NUMBER		APPR'D	CHECK	DRWN	DATE
A	NEW-RELEASE	LIGO-E000273-00-D	-	-	-	kenn	5/31/99

ISSUE DESCRIPTION

LIGO CALIFORNIA INSTITUTE OF TECHNOLOGY
MASSACHUSETTS INSTITUTE OF TECHNOLOGY

PO TELESCOPE
MIRROR POSITION TARGET

CAD FILE D000193-A | SIZE D | DWG. NO. D000193-A
SCALE FULL | SHEET 1 of 1