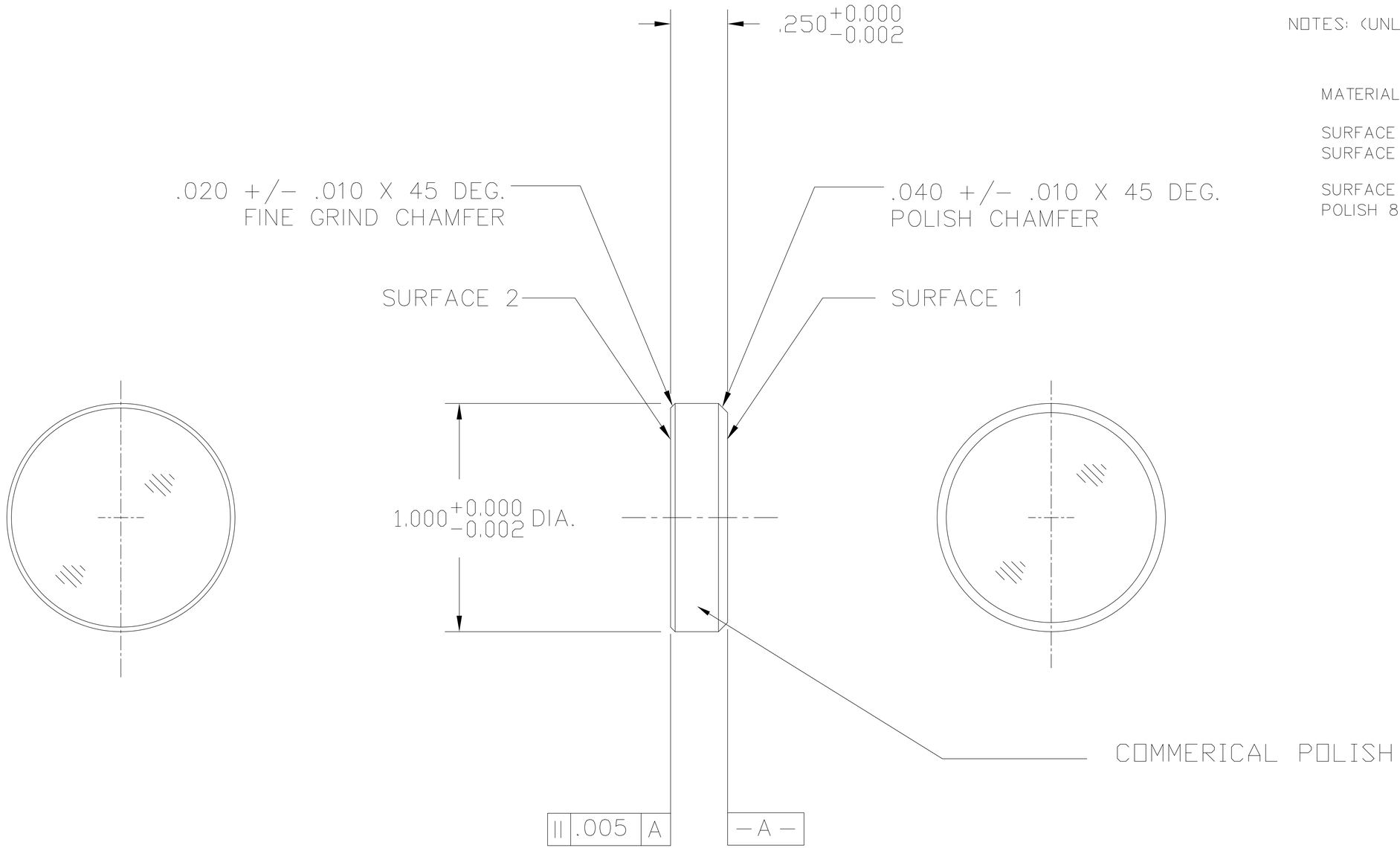

NOTES: (UNLESS OTHERWISE SPECIFIED)

MATERIAL: CORNING 7940/7980 1-G

SURFACE 1: POLISH 1/10 WAVE FLAT
SURFACE QUALITY: 60/40

SURFACE 2: SURFACE QUALITY:
POLISH 80/50

REF.	QTY.	PART or DRWG No.	NOMENCLATURE or DESCRIPTION	MATERIAL

PARTS and MATERIAL LIST

DWG. NO.	DESCRIPTION

REFERENCE DRAWINGS

UNLESS OTHERWISE SPECIFIED
DIMENSIONS ARE IN INCHES

TOLERANCES:
FRACTIONAL ±1/16
ANGULAR ±.25°
~~ANGULARMACH ± BEND ±~~
TWO PLACE DECIMAL ± .01
THREE PLACE DECIMAL ± .005
FINISHED SURFACE RMS 63
BREAK CORNERS IN: .015 OUT: .015
REMOVE ALL BURRS

MATERIAL:	HEAT TREAT:	FINISH:
SEE NOTES	/	

USED ON: XXX | NEXT ASS'Y: XXX

REV	DESCRIPTION	DCN NUMBER	-	APPR'D	CHECK	DRWN	DATE
A	NEW-RELEASE	LIGO-E000511-00-R	-	HELENA		kenm	11-15-00

ISSUE DESCRIPTION

LIGO CALIFORNIA INSTITUTE OF TECHNOLOGY
MASSACHUSETTS INSTITUTE OF TECHNOLOGY

ROUND
FUSED SILICA
SUBSTRATE 1 INCH

CAD FILE	SIZE	DWG. NO.
D000382-A	B	D000382-A

SCALE	SHEET
1 : 1	1 OF 1