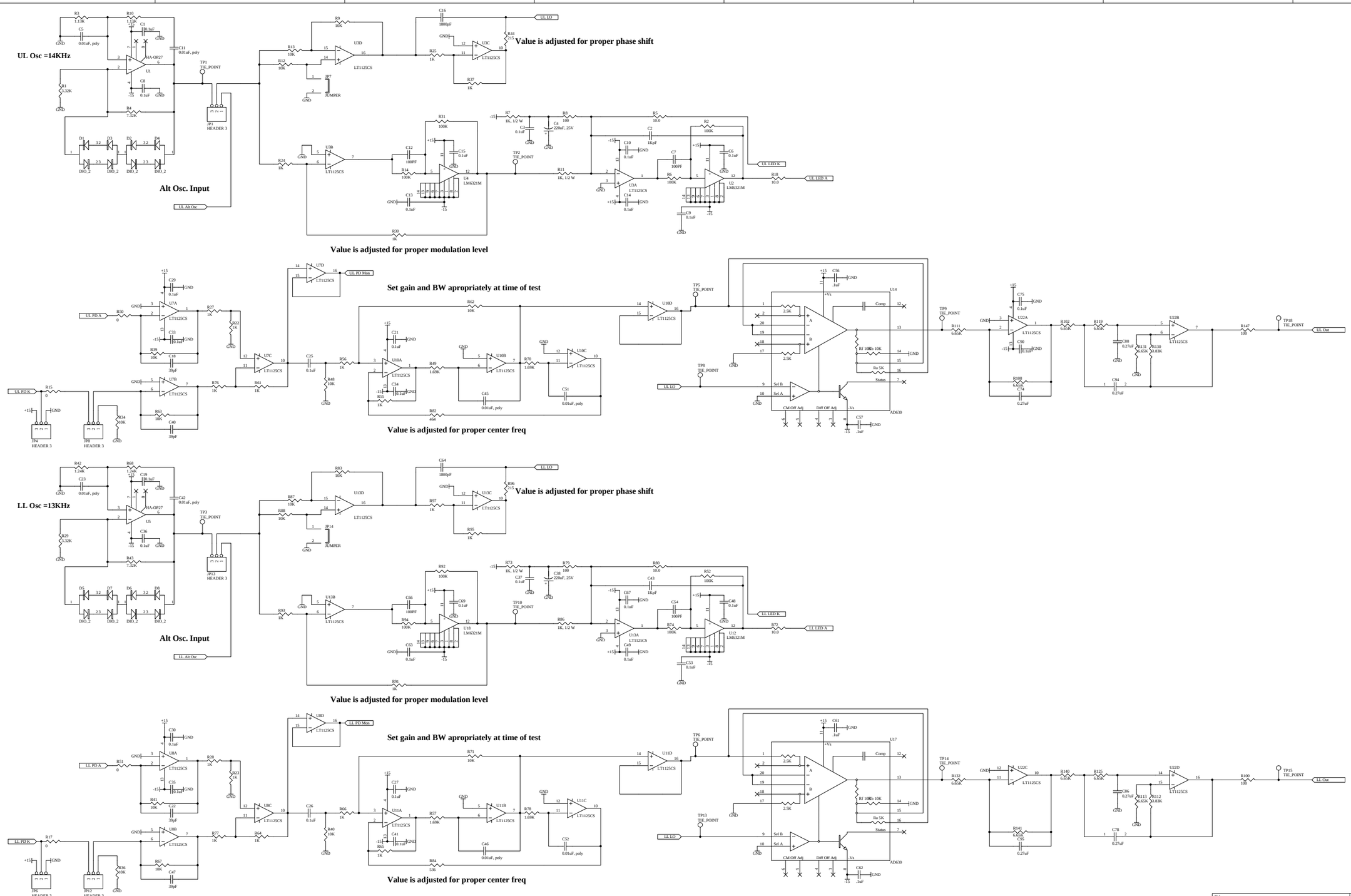

Title: *Stabilized Oscillator SUS Satellite Amplifier*		LIGO Laboratory, California Institute of Technology, Massachusetts Institute of Technology	LIGO
Size: D	DCC Number: D000394	SCH / PCB Revision: B	Engineer: J. Heefner
File: K:\ligoruser\jay\StabOscModOSEM\RevB\StabOscModRevB1.Sch			Date: 8-Dec-2000
			Time: 09:59:04
			Sheet 1 of 3

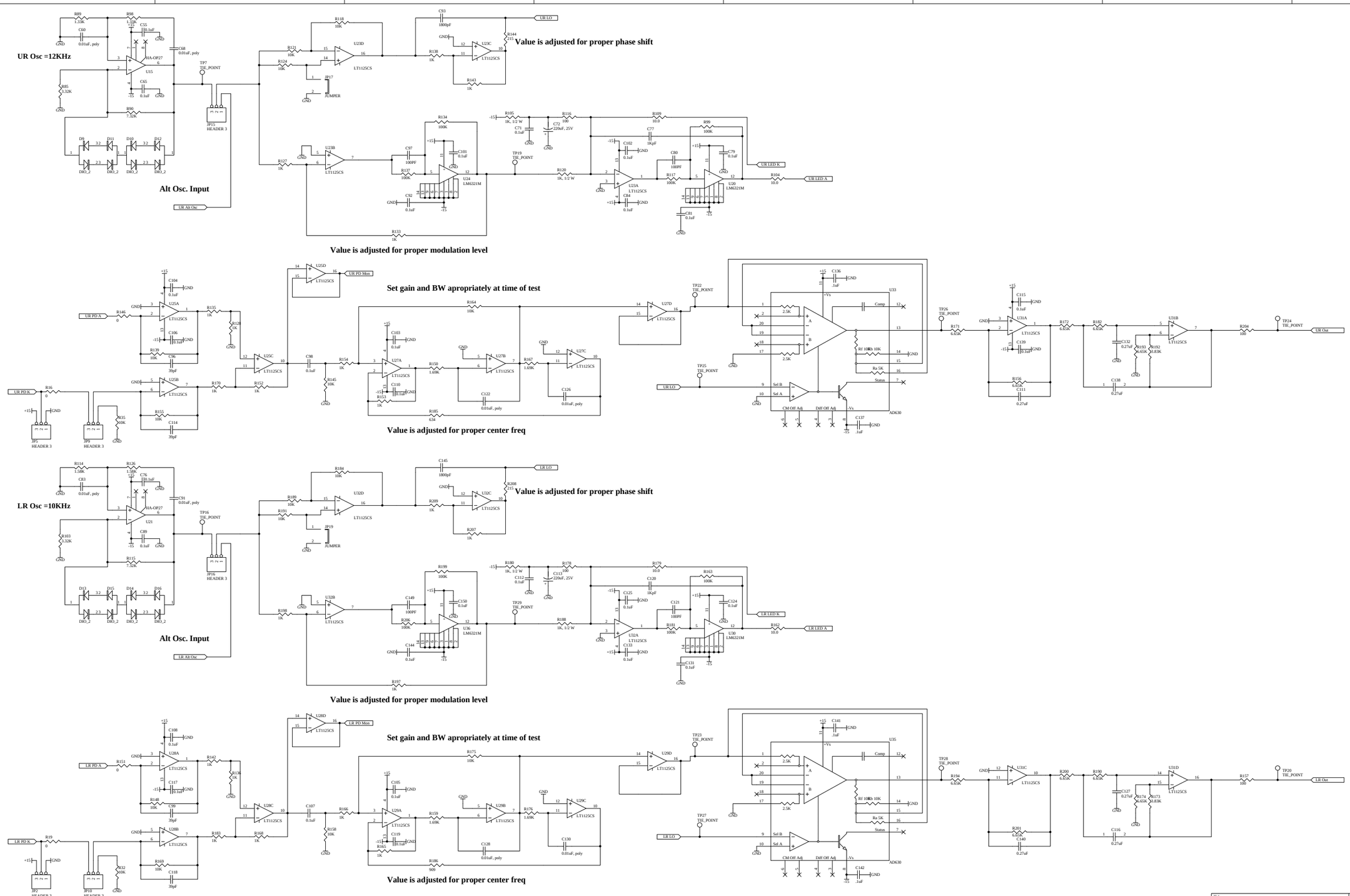

Title			
Stabilized Oscillator SUS Satellite Amplifier		*LIGO Laboratory* *California Institute of Technology* *Massachusetts Institute of Technology*	LIGO
Size: D	DCC Number: D000394	SCH / PCB Revision: B	Engineer: *J. Heefner*
File: K:\ligoraiser\jay\StabOscModOSEM\RevB\StabOscModRev82.Sch			Date: 8-Dec-2000 Time: 09:58:15 Sheet 2 of 3

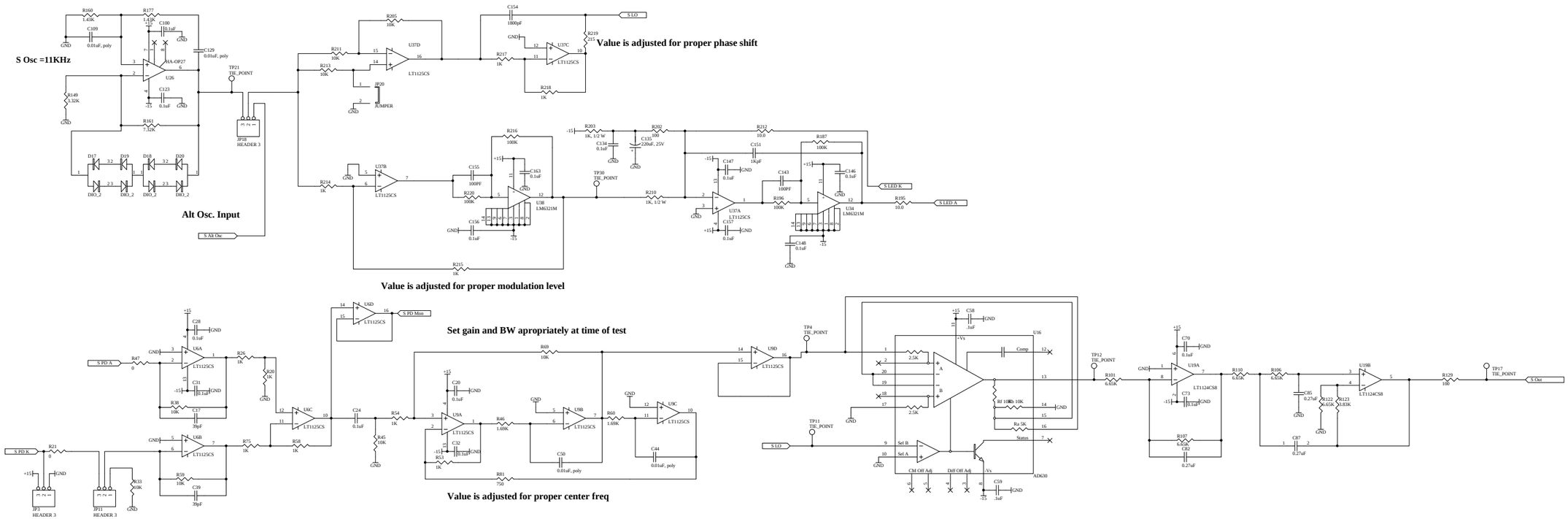

PD Monitors

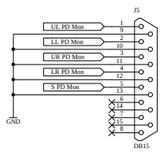

Alternate Oscillator Input

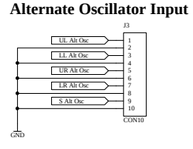

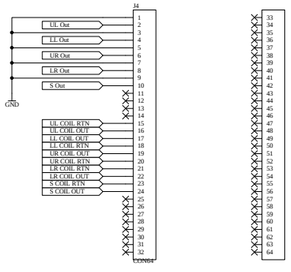

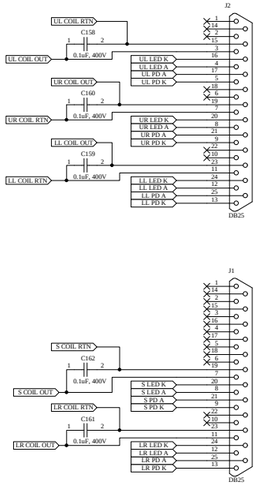

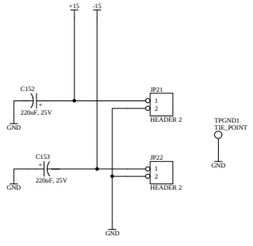

Title: ***Stabilized Oscillator SUS Satellite Amplifier***			*LIGO Laboratory* *California Institute of Technology* *Massachusetts Institute of Technology*	LIGO
Size: D	DCC Number: D000394	SCH / PCB Revision: B	Engineer: *J. Heefner*	Date: 4-Jun-2001 Time: 10:5:2:4
File: K:\ir\cad\ligo\users\jay\StabOscMod\OSLM\RevB\StabOscModRevB1.Sch				Sheet 3 of 3

StabOscModRevB1
StabOscModRevB1.Sch

- UL LO
- UL LED K
- UL LED A
- UL PD A
- UL PD K
- UL LO
- UL PD Mon
- UL Alt Osc
- UL Out
- LL LO
- LL LED K
- LL LED A
- LL PD A
- LL PD K
- LL LO
- LL PD Mon
- LL Alt Osc
- LL Out

StabOscModRevB2
StabOscModRevB2.Sch

- UR LO
- UR LED K
- UR LED A
- UR PD A
- UR PD K
- UR LO
- UR PD Mon
- UR Alt Osc
- UR Out
- LR LO
- LR LED K
- LR LED A
- LR PD A
- LR PD K
- LR LO
- LR PD Mon
- LR Alt Osc
- LR Out

StabOscModRevB3
StabOscModRevB3.Sch

- S LO
- S LED K
- S LED A
- S PD A
- S PD K
- S LO
- S PD Mon
- S Alt Osc
- S Out
- S PD K
- S PD A
- S PD K
- LL PD A
- UR PD K
- S PD A
- LR PD K
- LR PD A
- LL PD K
- UR PD A
- S LED K
- S LED A
- LL LED K
- LL LED A
- UR LED K
- UR LED A
- LR LED K
- LR LED A
- S LED K
- S LED A
- S PD Mon
- LL PD Mon
- UR PD Mon
- LR PD Mon
- S PD Mon
- S COIL OUT
- S COIL RTN
- UR COIL OUT
- UR COIL RTN
- LL COIL OUT
- LL COIL RTN
- LR COIL OUT
- LR COIL RTN
- S COIL OUT
- S COIL RTN
- S PD OUT
- LL PD OUT
- UR PD OUT
- LR PD OUT
- S PD OUT
- S COIL OUT
- S COIL RTN
- LR COIL OUT
- LR COIL RTN
- UR COIL OUT
- UR COIL RTN
- LL COIL OUT
- LL COIL RTN
- S COIL OUT
- S COIL RTN

Title: ***Stabilized Oscillator SUS Satellite Amplifier***			*LIGO Laboratory* *California Institute of Technology* *Massachusetts Institute of Technology*	LIGO
Size: B	DCC Number: D000394	SCH / PCB Revision: B	Engineer: *J. Heefner*	Date: 8-Dec-2000 Time: 09:58:57
File: K:\h\cad\ligo\users\jay\StabOscModOSEM\RevB\StabOscModRevB.Prj				Sheet 0 of 3