Note: All Signal)Xconnect) cannection are to VME modules on D000415, Sheet 3

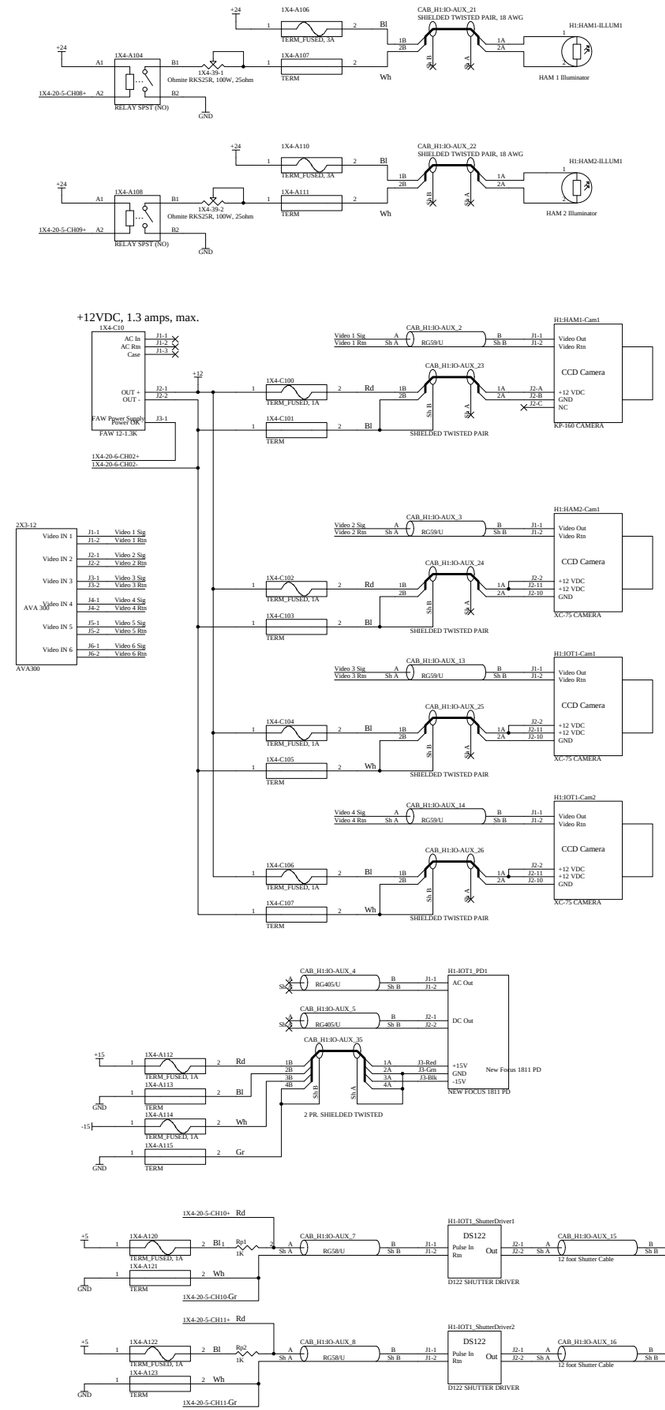

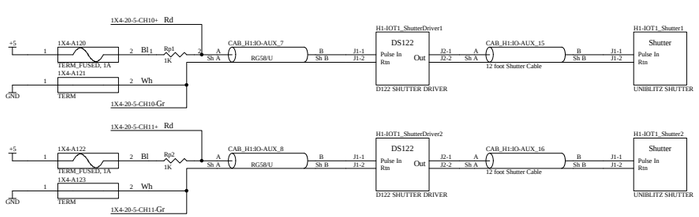

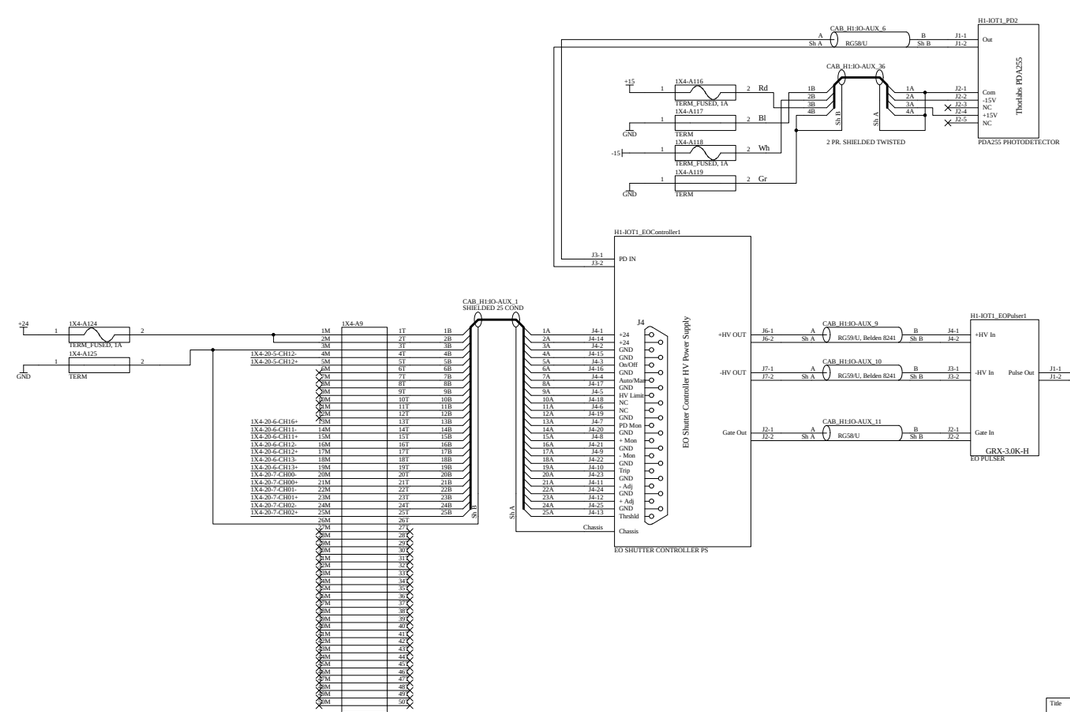

Title: *LHO 4K IO Auxiliary Controls Wiring*		*LIGO Laboratory, California Institute of Technology, Massachusetts Institute of Technology*	LIGO
Size: D	DCC Number: D000416	SCH / PCB Revision: 00	Engineer: *J. Heefner*
Date: 7-Dec-2000	Time: 10:48:04	Sheet 1 of 2	
File: K:\lb\cad\ligo\users\jay\wa4k_ioxralignment\aux1.sch			

Note: All Signal)Xconnect) cannection are to VME modules on D000415, Sheet 3

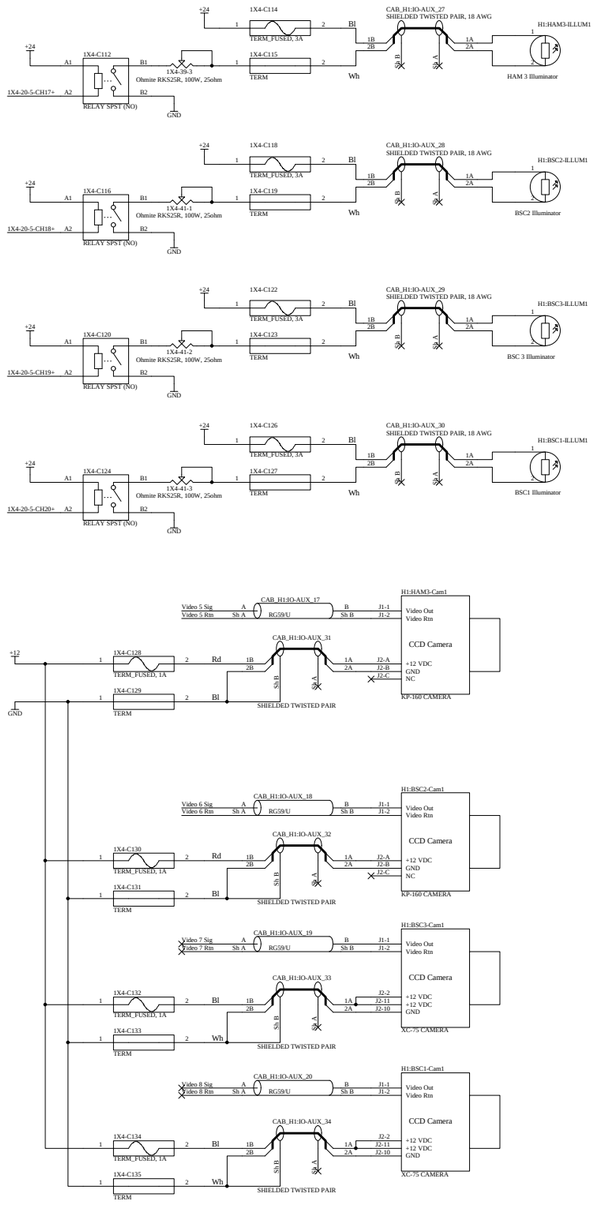

Title: ***LHO 4K IO Auxiliary Controls Wiring***			*LIGO Laboratory* *California Institute of Technology* *Massachusetts Institute of Technology*	LIGO
Size: D	DCC Number: D000416	SCH / PCB Revision: 00	Engineer: *J. Heefner*	Date: 7-Dec-2000 Time: 10:48:11
File: K:\ligo\users\jay\wa4k_xoralignment\aux2.sch				Sheet 2 of 2