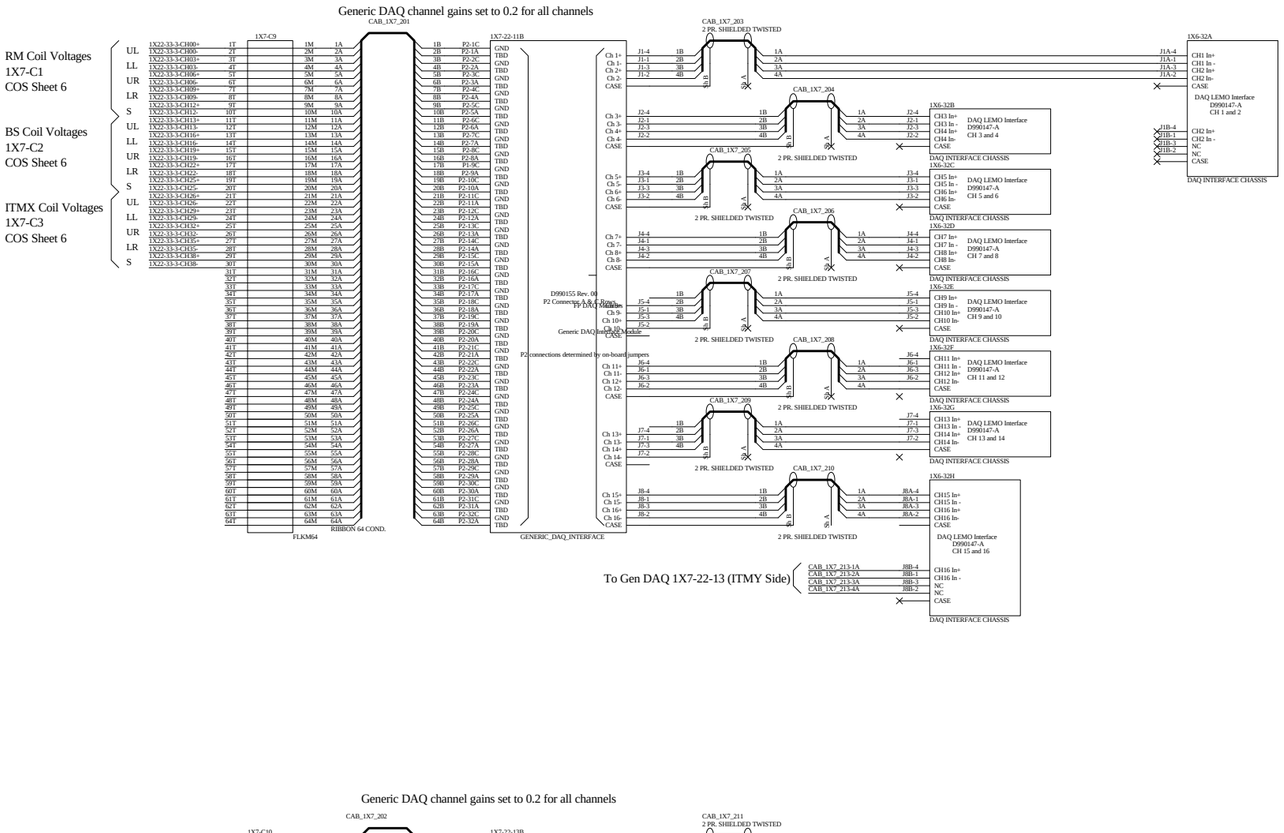

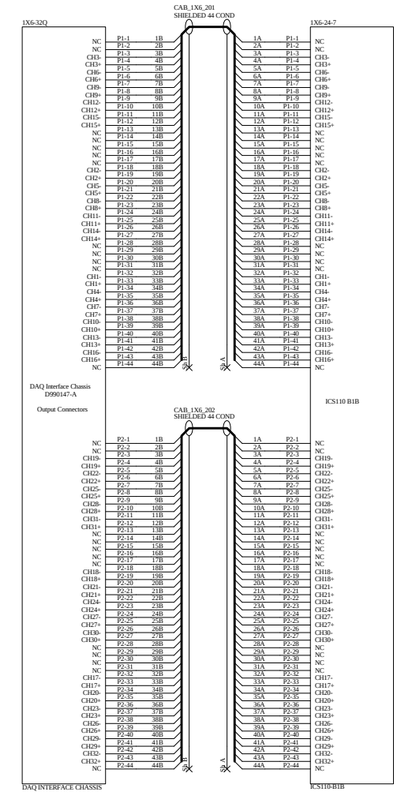

Channel Assignments	
Channel #	Signal
1	RM UL Coil
2	RM LL Coil
3	RM UR Coil
4	RM LR Coil
5	RM Side Coil
6	BS UL Coil
7	BS LL Coil
8	BS UR Coil
9	BS LR Coil
10	BS Side Coil
11	ITMX UL Coil
12	ITMX LL Coil
13	ITMX UR Coil
14	ITMX LR Coil
15	ITMX Side Coil
16	ITMY Side Coil
17	NC
18	NC
19	ITMY UL Coil
20	ITMY LL Coil
21	ITMY UR Coil
22	ITMY LR Coil
23	MMT3 UL Coil
24	MMT3 LL Coil
25	MMT3 UR Coil
26	MMT3 LR Coil
27	MMT3 Side Coil
28	NC
29	NC
30	NC
31	NC
32	NC

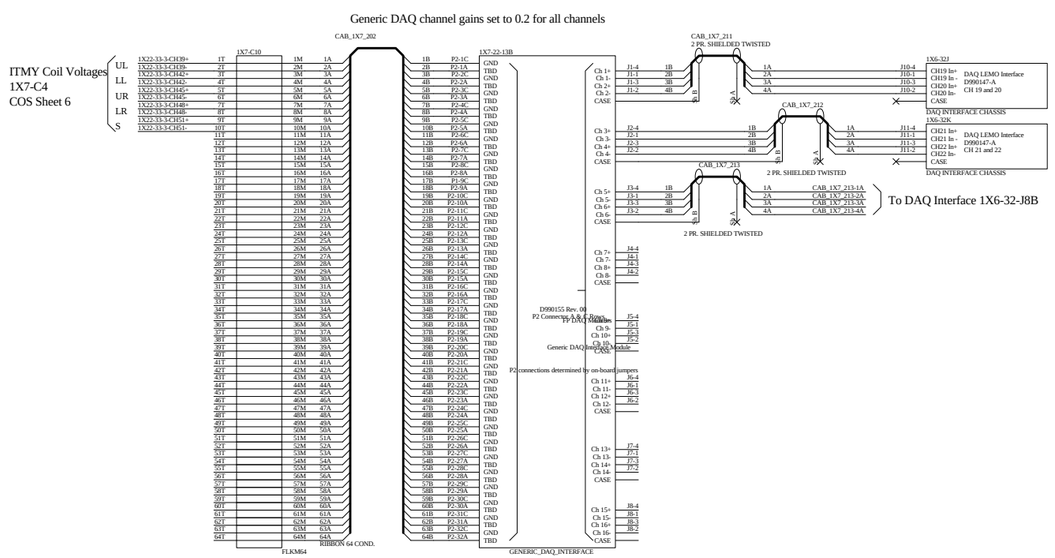

Generic DAQ channel gains set to 0.2 for all channels

Title	*LHO 4K LVEA COS Coil Voltage DAQ Connections*
	LIGO Laboratory California Institute of Technology Massachusetts Institute of Technology
Size: D	DCC Number: D010109
SCH / PCB Revision: 00	Engineer: *J. Heefner*
Date: 31-May-2001	Time: 08:23:20
File: E:\hvcad\ligo\users\jan\wa4kCOS\TempCoilDAQ\wa4kCOSTempDAQ.Sch	Sheet 1 of 1