Note: AC Coupled DAQ replaced w/ DC coupled gain=1 on SOS Driver Boards

MC1 (Driver 1)

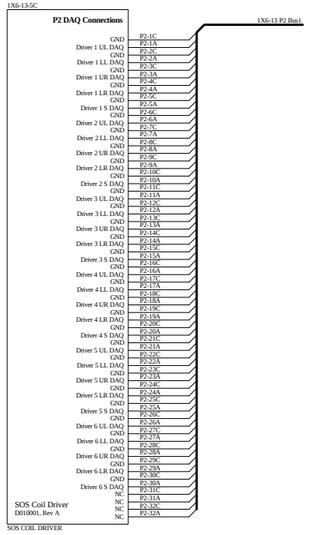

MC2 (Driver 2)

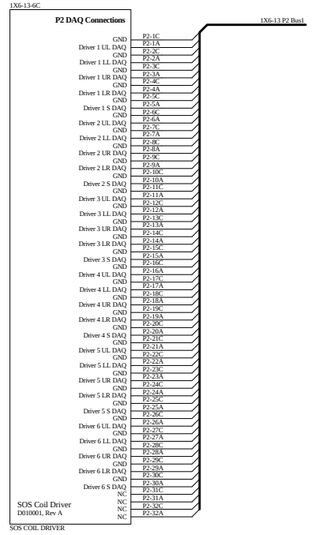

MC3 (Driver 3)

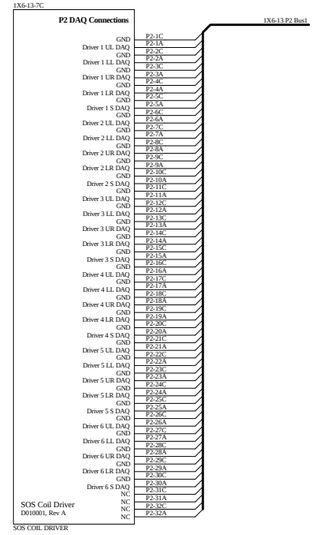

SM1 (Driver 4)

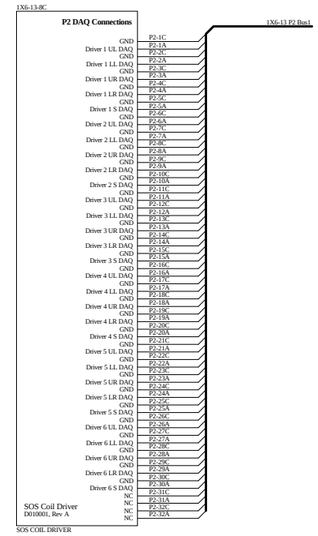

MMT1 (Driver 5)

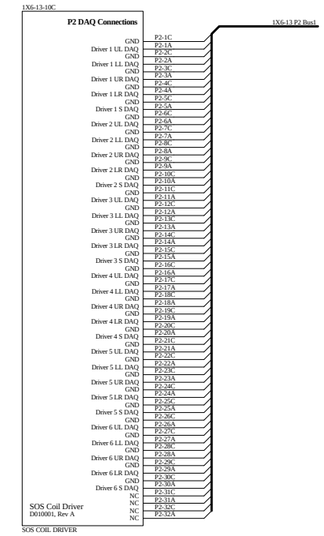

MMT2 (Driver 6)

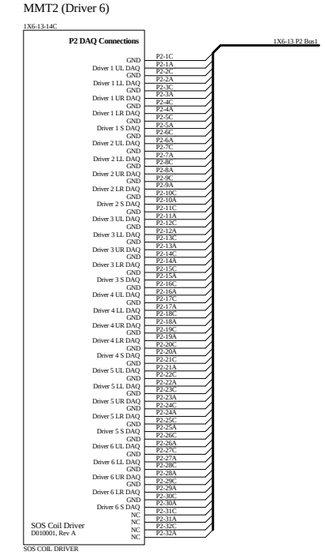

Gain = 0.1 all channels

MC1, MC2, MC3

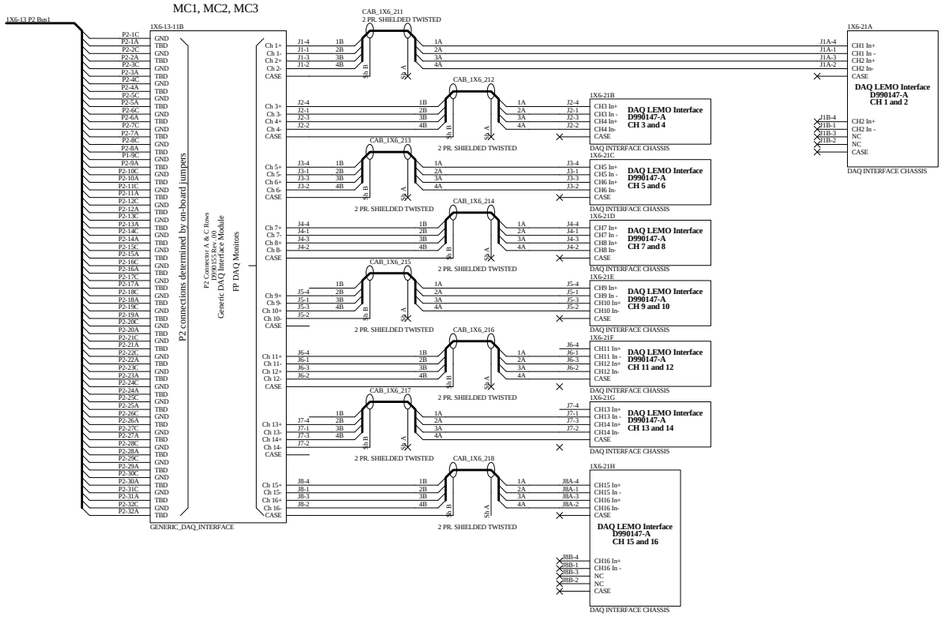

Gain = 0.1 all channels

SM1, MMT1, MMT2

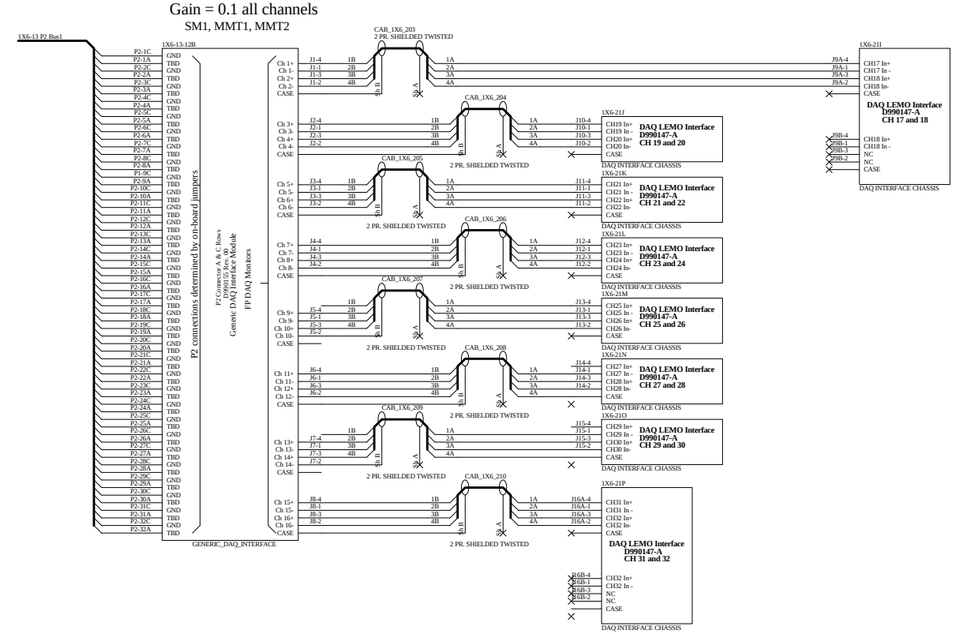

Title: *LHO 4K LVEA SOS Coil DAQ Connections*		*LIGO Laboratory, California Institute of Technology, Massachusetts Institute of Technology*		LIGO
Size: D	DCC Number: D010110	SCH / PCB Revision: 00	Engineer: *J. Heefner*	Date: 30-May-2001
File: E:\fircaf\ligo\aneer\jan\was4k\SOS\Rev02\was4kSOSTempDAQ1.Sch				Time: 13:36:00
				Sheet 1 of 2

Note: AC Coupled DAQ replaced w/ DC coupled gain=1 on SOS Driver Boards

MMT3 (Driver 1)

Gain = 0.1 all channels

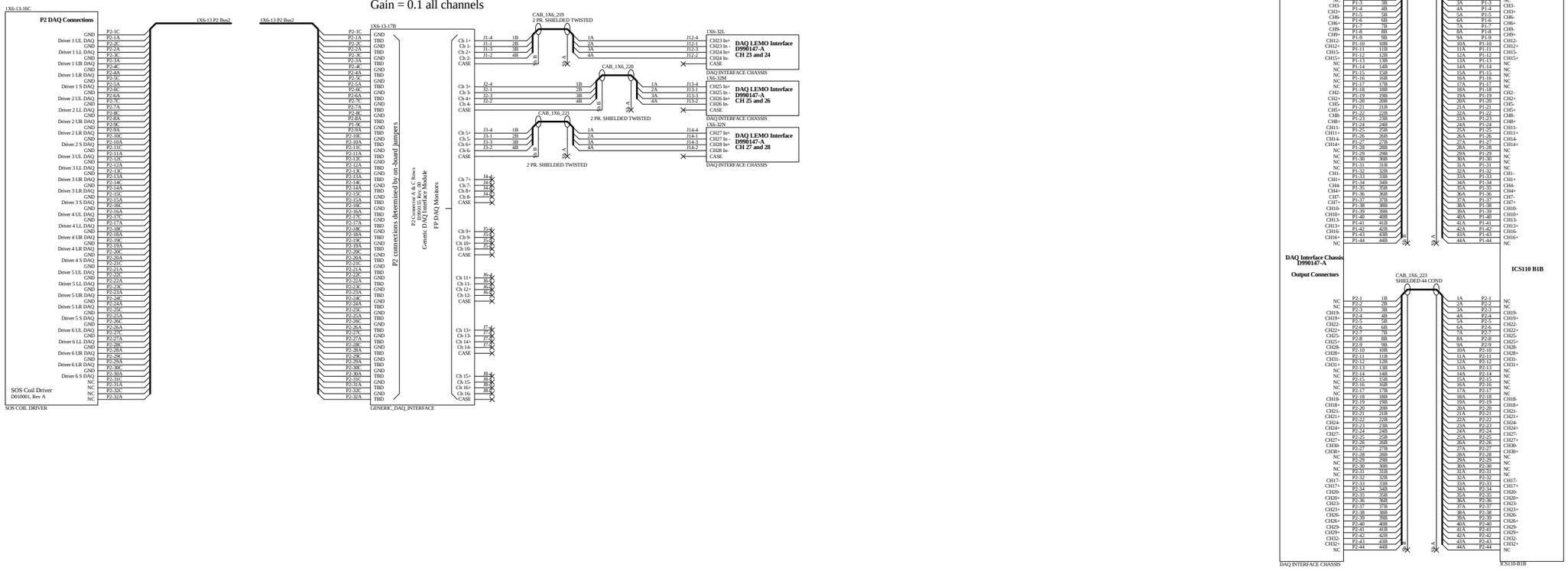

Channel Assignments	
Channel #	Signal
1	MC1 UL Coil
2	MC1 LL Coil
3	MC1 UR Coil
4	MC1 LR Coil
5	MC1 Side Coil
6	MC2 UL Coil
7	MC2 LL Coil
8	MC2 UR Coil
9	MC2 LR Coil
10	MC2Side Coil
11	MC3 UL Coil
12	MC3 LL Coil
13	MC3 UR Coil
14	MC3 LR Coil
15	MC3 Side Coil
16	NC
17	SM1 UL Coil
18	SM1 LL Coil
19	SM1 UR Coil
20	SM1 LR Coil
21	SM1 Side Coil
22	MMT1 UL Coil
23	MMT1 LL Coil
24	MMT1 UR Coil
25	MMT1 LR Coil
26	MMT1 Side Coil
27	MMT2 UL Coil
28	MMT2 LL Coil
29	MMT2 UR Coil
30	MMT2 LR Coil
31	MMT2 Side Coil
32	NC

Title: LHO 4K LVEA SOS Coil DAQ Connections			LIGO Laboratory California Institute of Technology Massachusetts Institute of Technology		LIGO
Size: D	DCC Number: D010110	SCH / PCB Revision: 00	Engineer: J. Heefner		Date: 30-May-2001
					Time: 13:35:43
File: E:\Ryan\Bigtuney\jan\wa4kSOSRev02\wa4kSOSTempDAQ2.Sch					Sheet 2 of 2