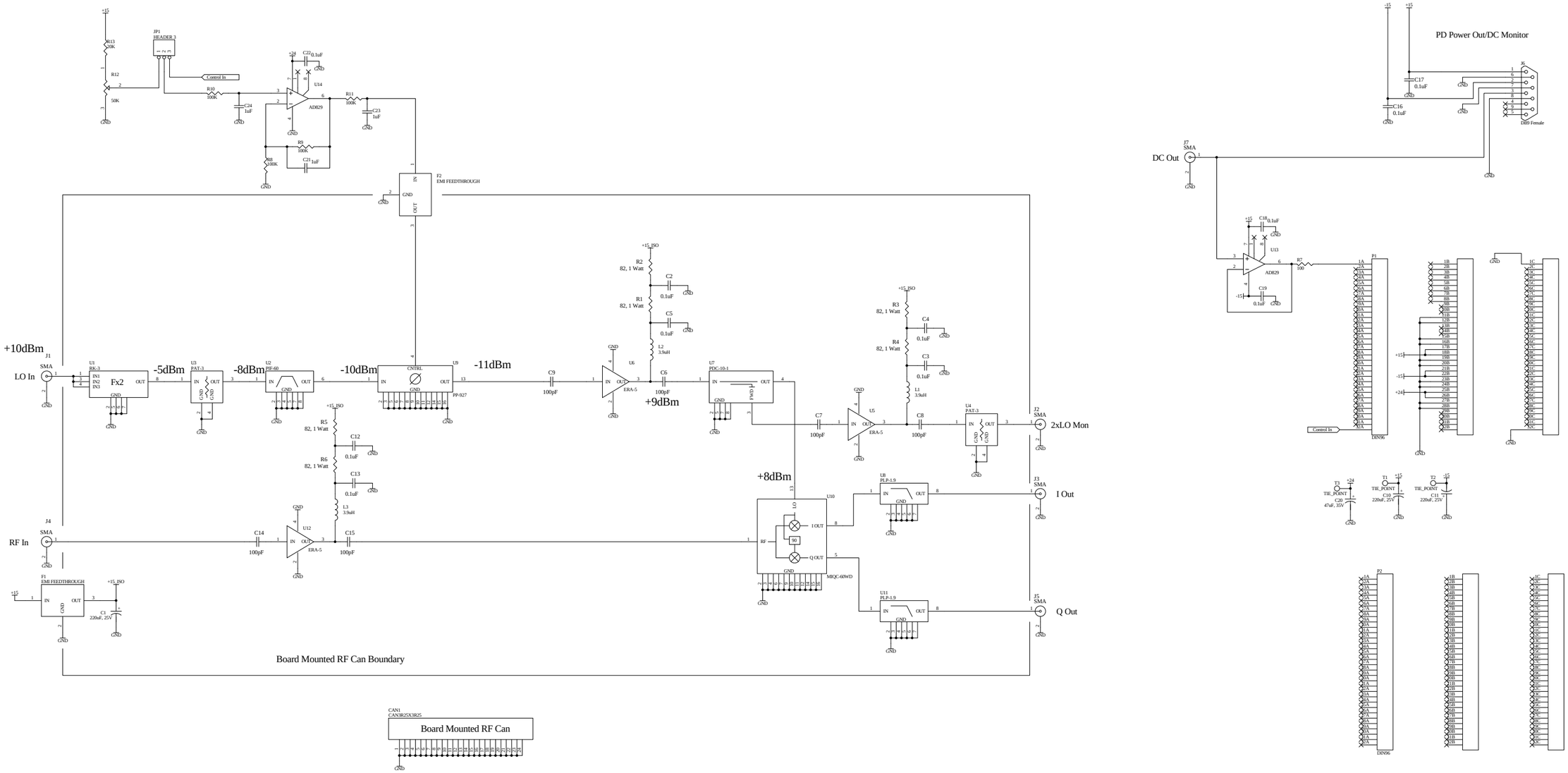

Title: *2 Omega I and Q Demodulator Board*		*LIGO Laboratory* *California Institute of Technology* *Massachusetts Institute of Technology*	LIGO
Size: D	DCC Number: D010276	SCH / PCB Revision: A	Engineer:
File: E:\Brian\Sign\aserv\aro\2OmegaIandQDemod\2OmegaIandQDemod.Sch			Date: 6-Dec-2001 Time: 10:18:48 Sheet 1 of 1