NOTES: (UNLESS OTHERWISE SPECIFIED)

REV.	DATE	ECN #	DRAWING TREE #

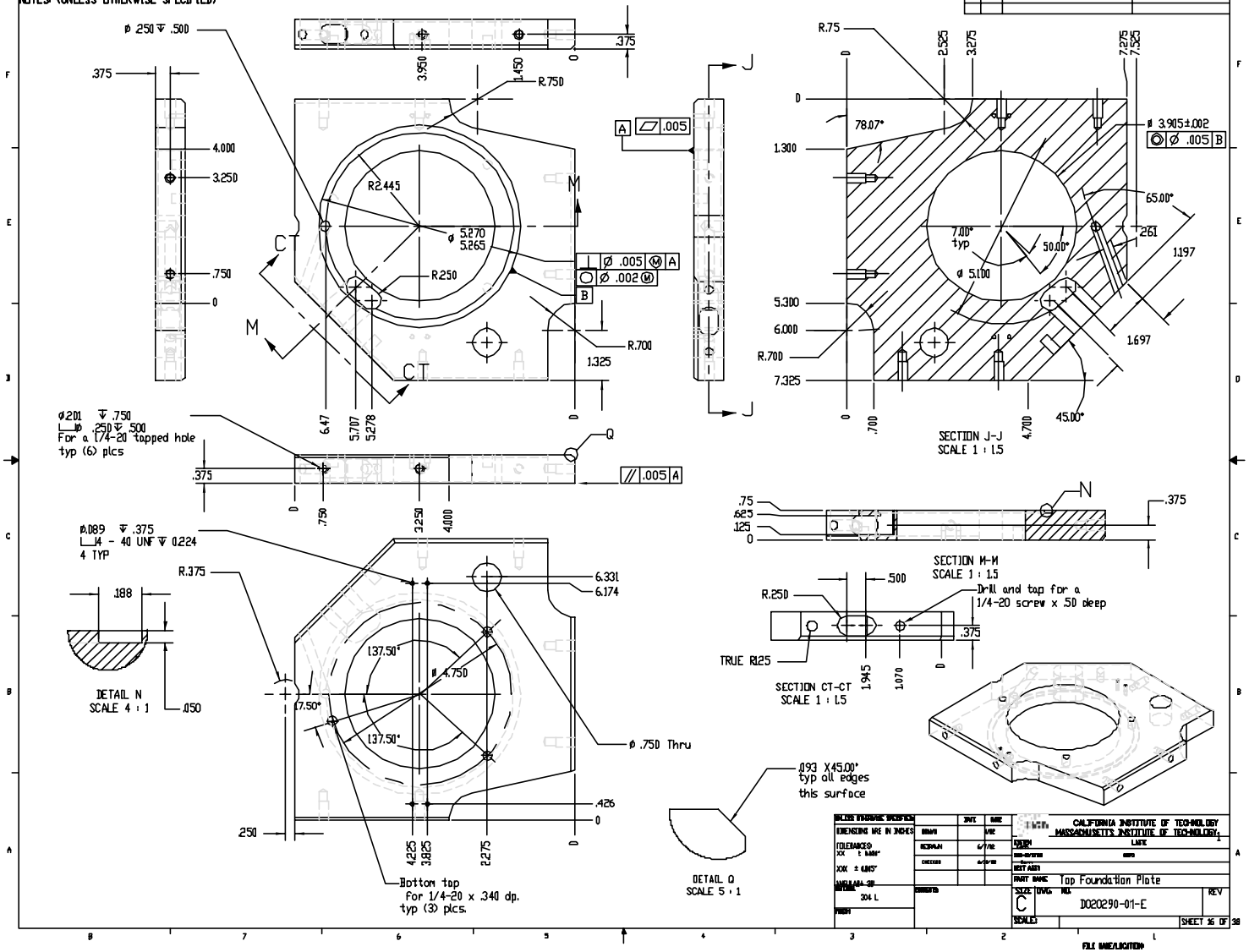

UNLESS OTHERWISE SPECIFIED: DIMENSIONS ARE IN INCHES; TOLERANCES: XX ± .0005"; XXX ± .0005"; ANGULARITY ±30'; MATERIAL 304 L; FINISH	DRAWN	INIT.	DATE
	SCRIBAN		6/7/02
	CHECKED		6/7/02
	COMMENTS		

CALIFORNIA INSTITUTE OF TECHNOLOGY
MASSACHUSETTS INSTITUTE OF TECHNOLOGY

DESIGN: LARK
NEXT ASSY:
PART NAME: Top Foundation Plate
SIZE: C
DWG. NO.: D020290-01-E
REV
SCALE:
SHEET 35 OF 38

FILE NAME/LOCATION

1 Required for
each actuator