REV.	DATE	DCN #	DRAWING TREE #

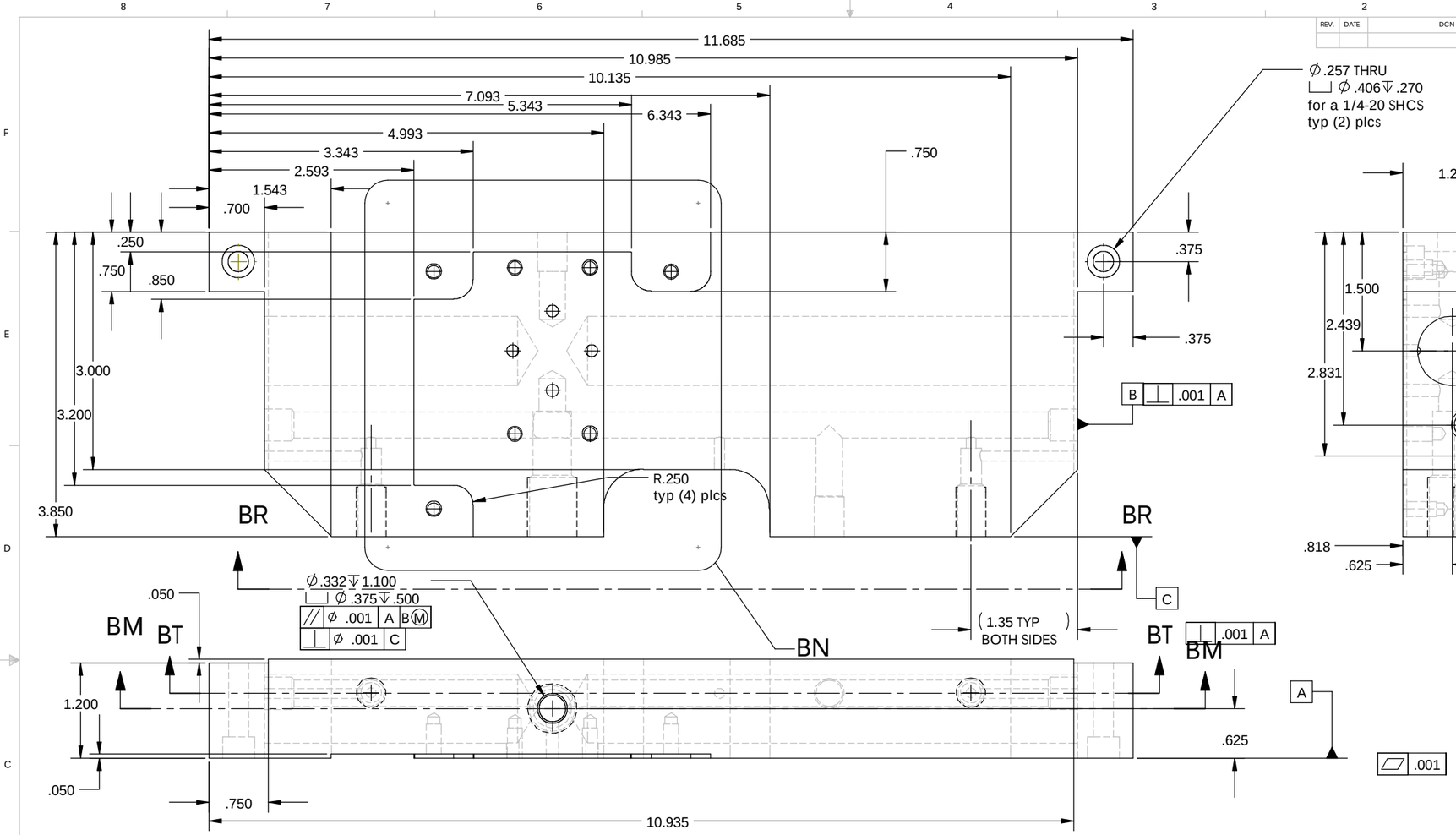

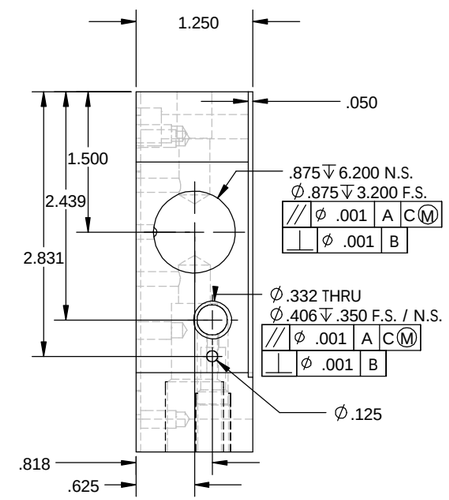

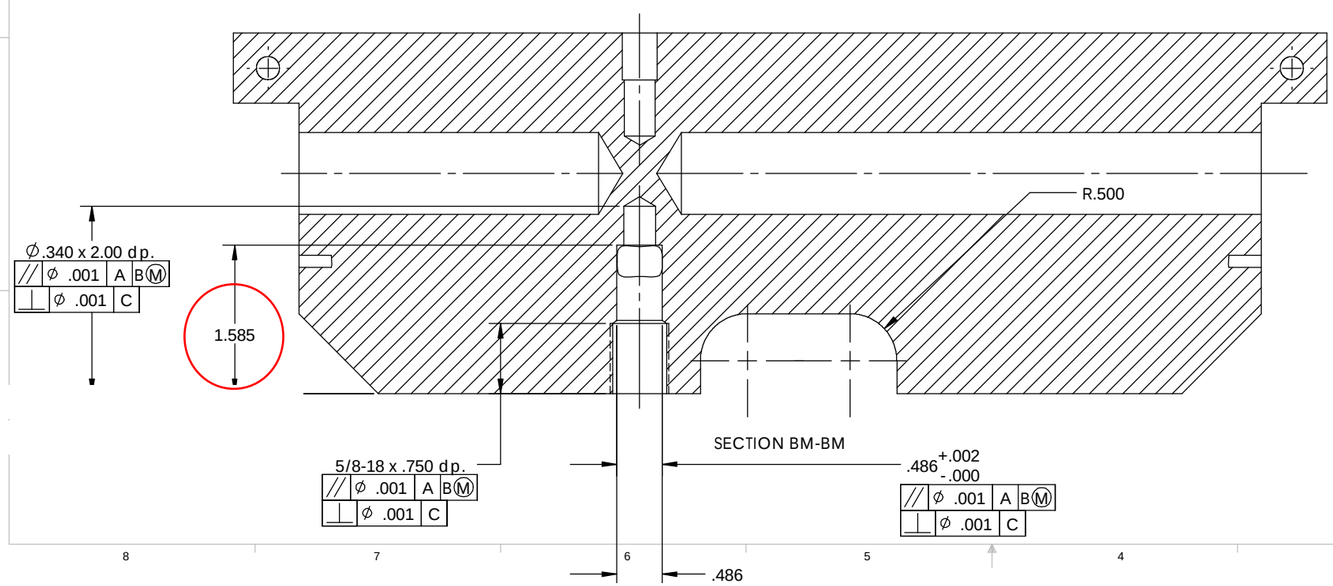

UNLESS OTHERWISE SPECIFIED:		DATE	NAME
DIMENSIONS ARE IN INCHES	DRAWN	4/02	Hardham
TOLERANCES: .XX ± 0.020"	REDRAWN	6/22/02	Hammond
.XXX ± 0.005"	CHECKED	6/24/02	Kern
ANGULAR ± 30'			
MATERIAL 304L	COMMENTS:		
FINISH			

LIGO

CALIFORNIA INSTITUTE OF TECHNOLOGY
MASSACHUSETTS INSTITUTE OF TECHNOLOGY

SYSTEM	LASTI
SUB-SYSTEM	HEPI
NEXT ASSY	
PART NAME	HEPI Manifold Sheet 1
SIZE C	DWG. NO. D020300-02-E
REV	
SCALE:	SHEET 28 OF 37

FILE NAME/LOCATION: