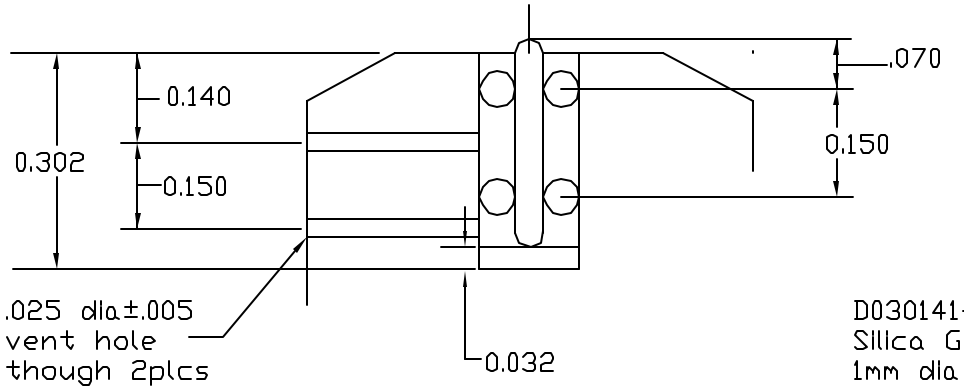

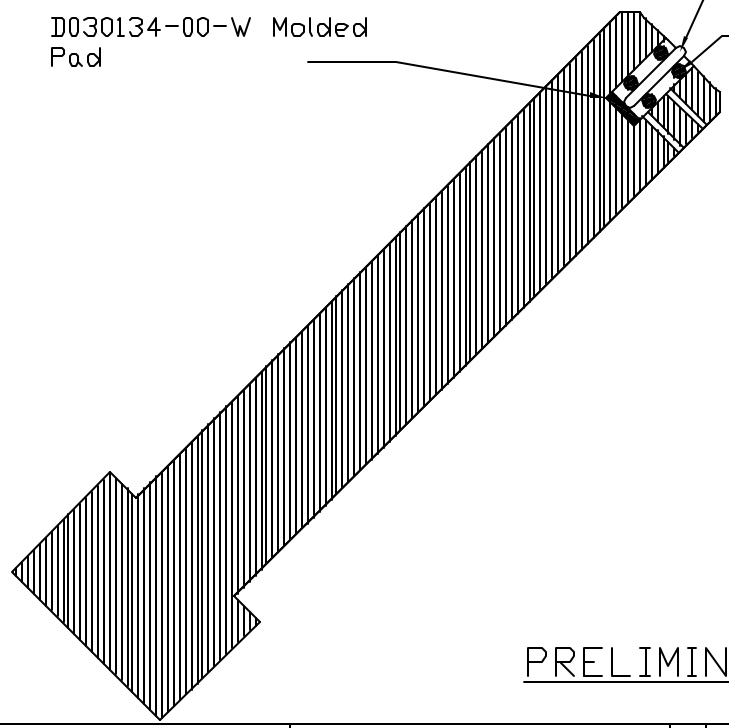

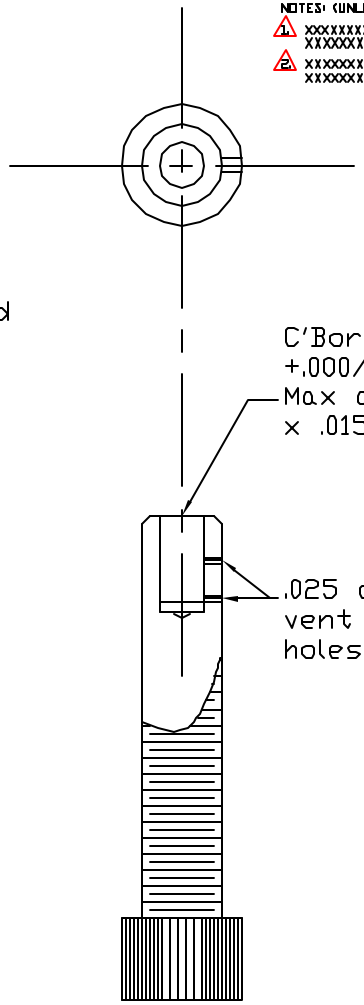

NOTES: (UNLESS OTHERWISE SPECIFIED)

1. XXXX