NOTES: (UNLESS OTHERWISE SPECIFIED)

1. Material: Molding process per LIGO E970130-A-D
   Material, Process, Handling and Shipping Specification

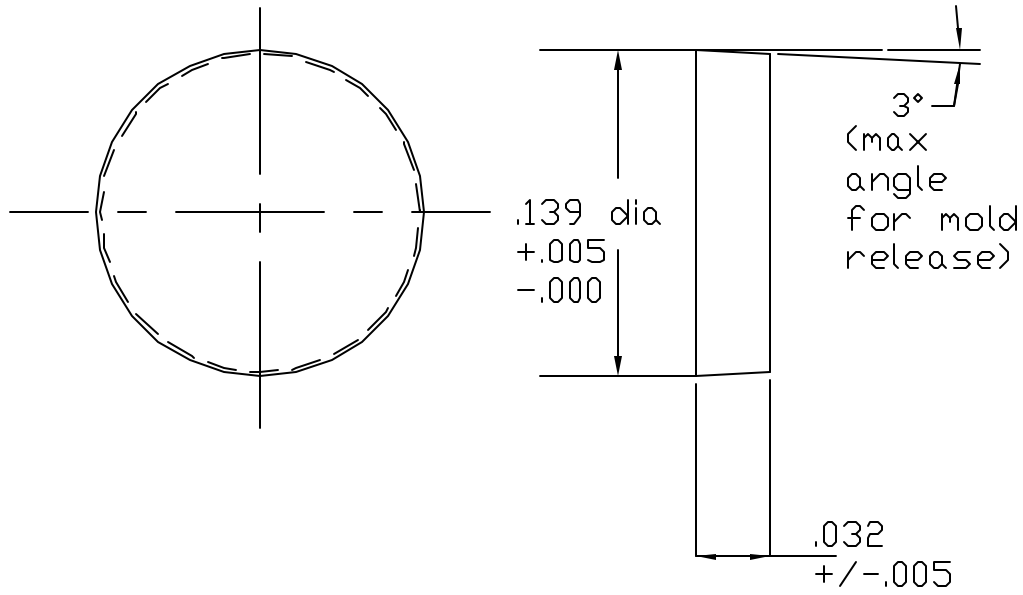


PRELIMINARY

PARTS and MATERIAL LIST

UNLESS OTHERWISE SPECIFIED
DIMENSIONS ARE IN INCHES

TOLERANCES:
FRACTIONAL ±1/16
ANGULAR ± 1.0 DEG.
ANGULAR/MACH ± BEND ±
TWO PLACE DECIMAL ±.010

THREE PLACE DECIMAL ±.005
FINISHED SURFACE RMS 32 MICRO
BREAK CORNERS ON .005 OUT .010
REMOVE ALL BURRS

MATERIAL: see notes 3 | HEAT TREAT: | FINISH:

| REV | DESCRIPTION | DCN NUMBER | APPR'D | CHECK | DRWN | DATE |
|---|---|---|---|---|---|---|
| 01 | PRE-RELEASE | - | - | | D.Cook | 02/21/03 |

ISSUE DESCRIPTION

LIGO CALIFORNIA INSTITUTE OF TECHNOLOGY
MASSACHUSETTS INSTITUTE OF TECHNOLOGY

MOLDED BUMPER INSERT
FOR 1/4-20 EARTHQUAKE STOPS

CAD FILE: J030L134.dwg
DRAWING NO: D030134-00-V
REV: B
SCALE: NTS
SHEET: 1 OF 1

INVE NO.: D0400P1301
REFERENCE DRAWINGS:
USED ON: 3/4-20 301 EARTHQUAKE STOPS
NEXT ASSY: D030099-00-V