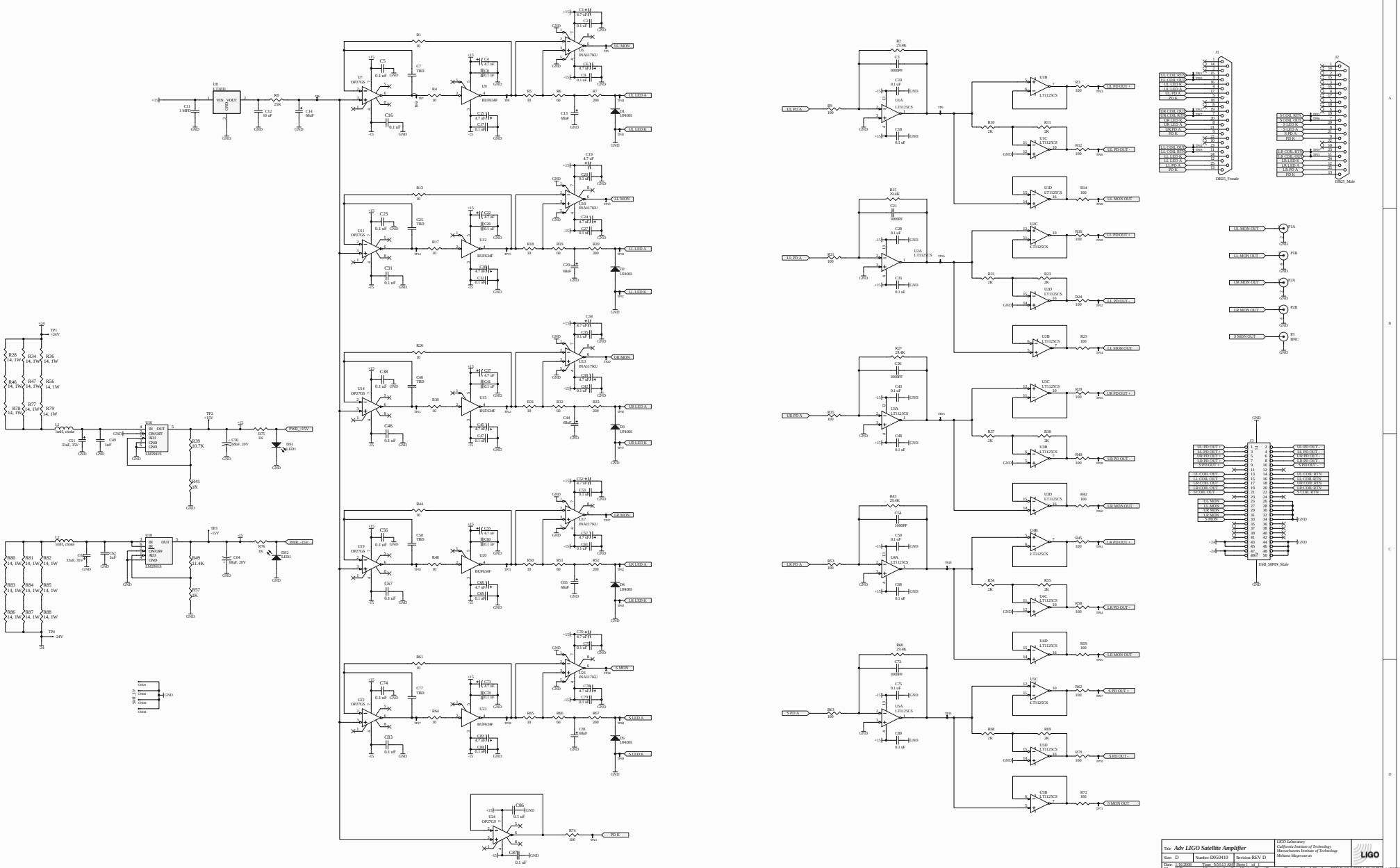

Title Adv LIGO Satellite Amplifier
Size: D
Number: D050410
Revision: REV D
Date: 6-16-2008
Time: 9:56:13 AM
Sheet 1 of 1
File: C:\Documents and Settings\mahana\Local Settings\Temp\Temporary Directory 8 for AdSat Amp_REV D\10-2-2007 7-32-43 PM.zip\D050410_1
LIGO Laboratory
California Institute of Technology
Massachusetts Institute of Technology
Mohana Mogavarian
LIGO