NOTES: (UNLESS OTHERWISE SPECIFIED)
1. BREAK ALL SHARP EDGES .01/.02 X 45°
2. FILETS: R .015 MAX
3. ALL DIMENSIONS IN INCHES

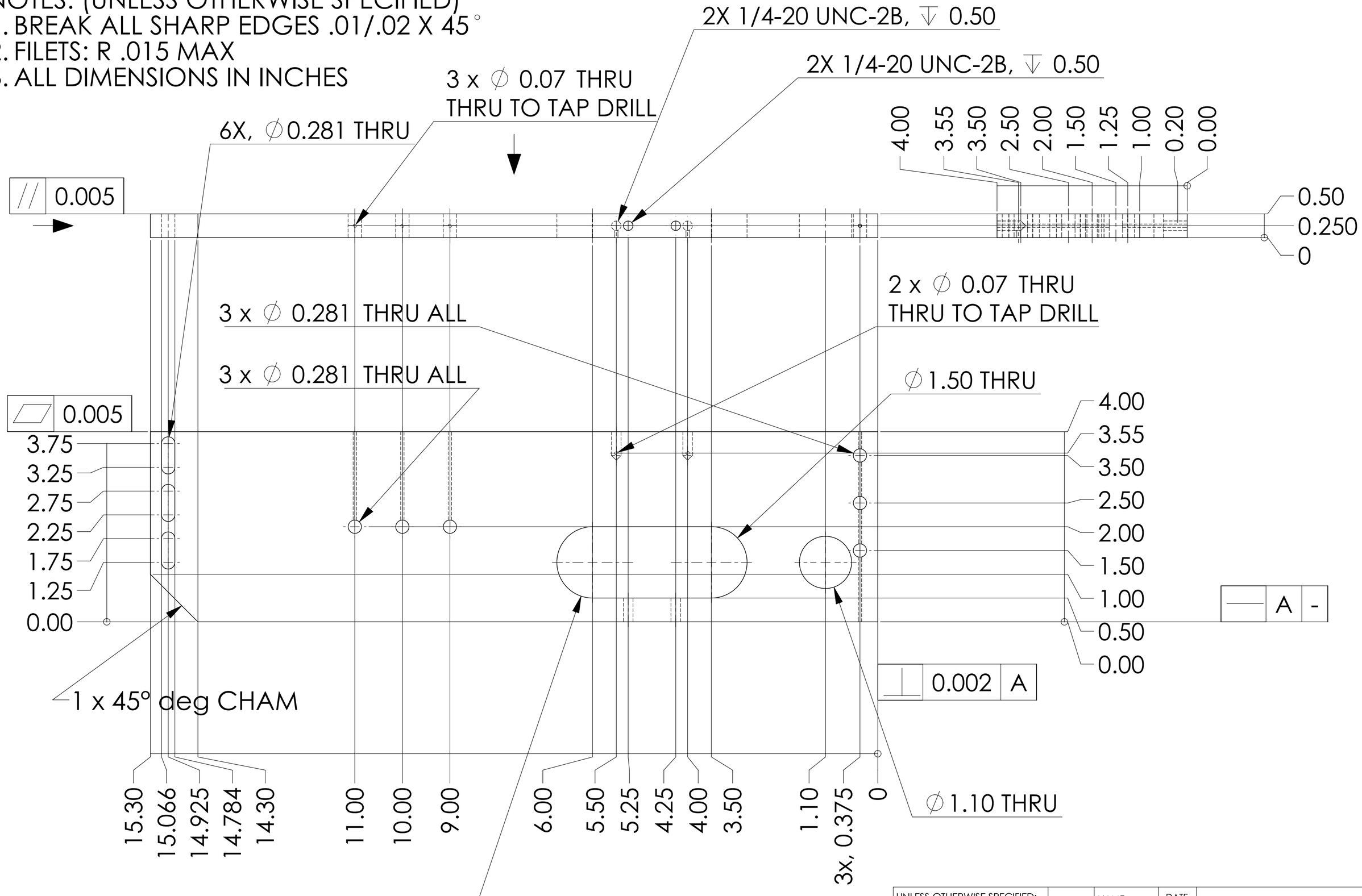

UNLESS OTHERWISE SPECIFIED:		NAME	DATE	Massachusetts Institute of Technology LIGO project
DIMENSIONS ARE IN INCHES TOLERANCES ARE: .XX ± .01 .XXX ± .005 ANGULAR: ± .25°	DRAWN	E. Innerhofer	06/2006	TITLE: RPI, Suspension-Cage-Side-Plate
	MFG APPR.			
MATERIAL 3XX SERIES SST	Q.A.			
FINISH 64	COMMENTS:			SIZE C / DWG. NO. LIGO-D060156-00-R / REV 00
DO NOT SCALE DRAWING				SCALE: 5:7 / WEIGHT: / SHEET 1 OF 1

SolidWorks Educational License
Instructional Use Only