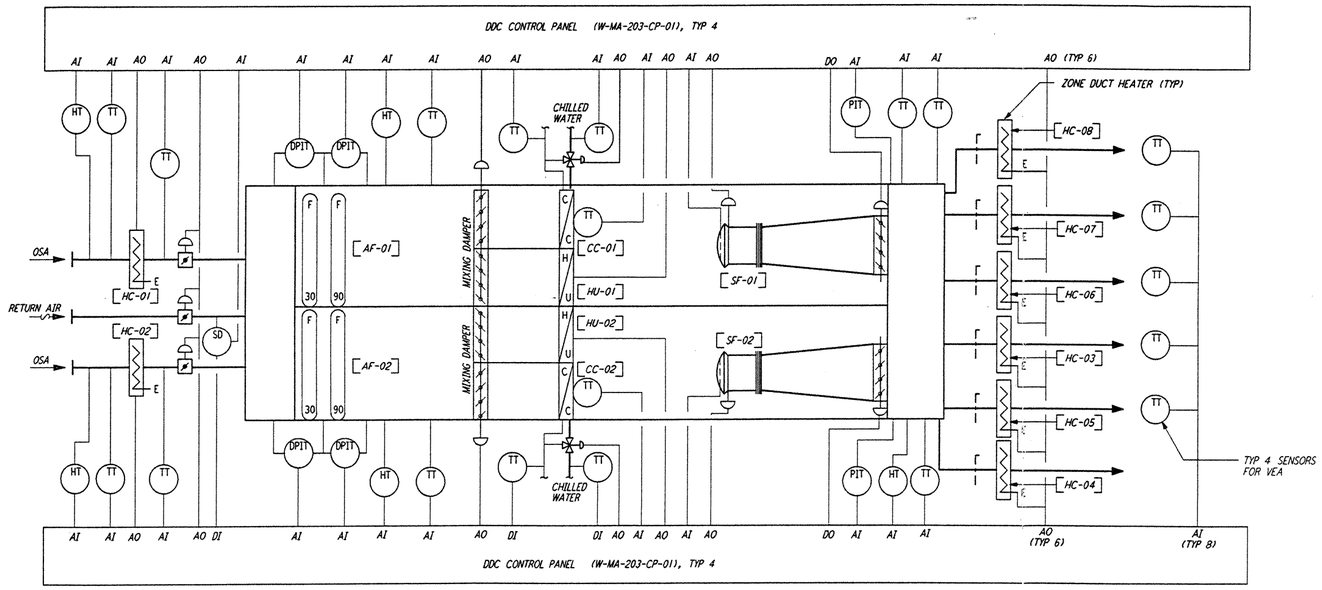

MID STATION A CONTROL DIAGRAM

(TYP. FOR MID STN-B, END STN-A & END STN-B)

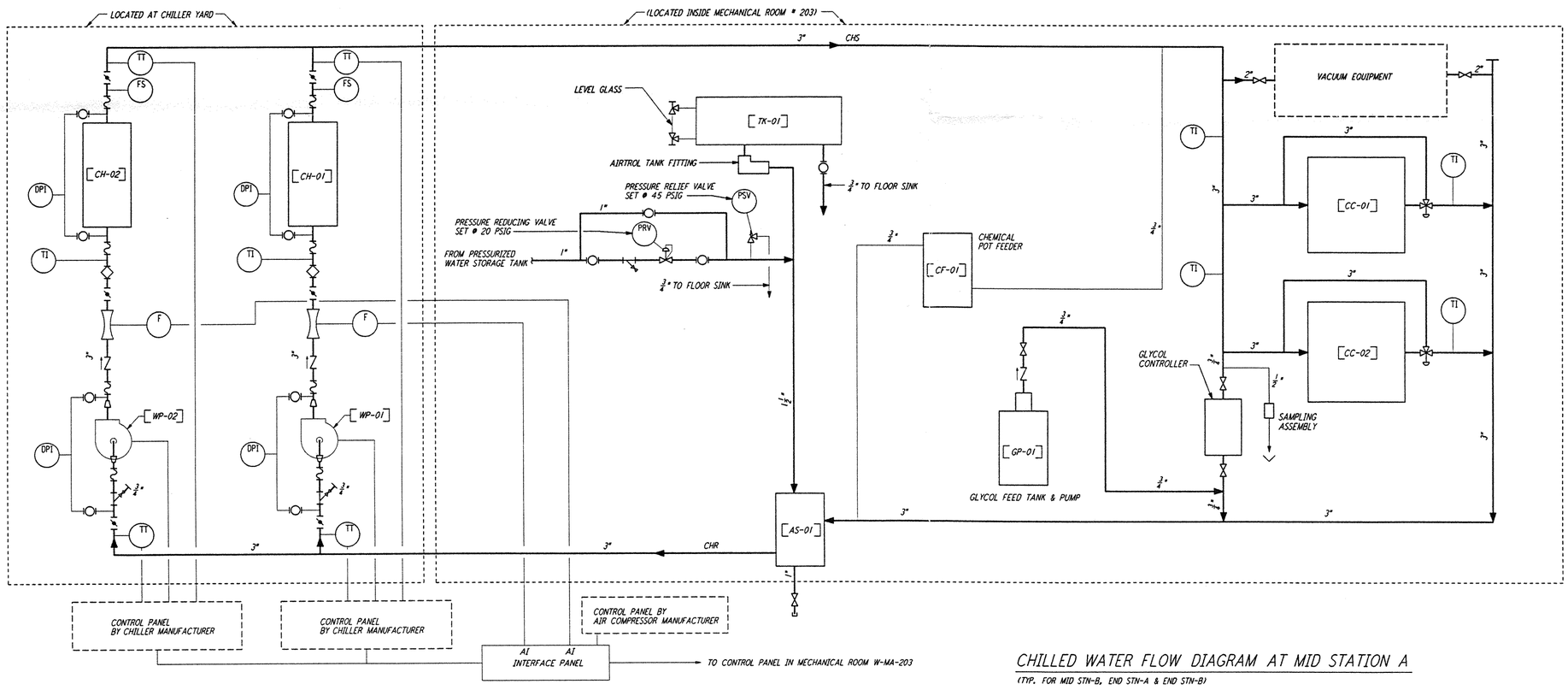

CHILLED WATER FLOW DIAGRAM AT MID STATION A

(TYP. FOR MID STN-B, END STN-A & END STN-B)

NOTES:

1. FOR LEGEND, ABBREVIATIONS AND GENERAL NOTES SEE SHEETS WA-H-001 AND WA-H-002.
2. FOR PIPING DETAILS OF COOLING COILS, WATER CHILLERS, PUMPS AND CHEMICAL POT FEEDERS SEE SHEETS WA-H-411 AND WA-H-412.

REFERENCES		REVISIONS						
DRAWING NO.	DESCRIPTION	NO.	DATE	BY	CHKD	ENGR	PROJ	DESCRIPTION

ISSUED FOR CONSTRUCTION		
DRAWN	CLP	6-24-96
CHECKED	MC	7/3/96
ENGINEER	AA	7/3/96
PROJ	HWLW	7/8/96

EXPIRES 10-8-96

PARSONS
100 WEST WALNUT STREET
PASADENA, CALIFORNIA

LIGO
CALIFORNIA INSTITUTE OF TECHNOLOGY
MASSACHUSETTS INSTITUTE OF TECHNOLOGY

LASER INTERFEROMETER
GRAVITATIONAL-WAVE OBSERVATORY
SITE NO. 1 - HANFORD, WASHINGTON

TITLE: HVAC MID & END STATIONS CHILLED WATER & AIR FLOW DIAGRAMS

SCALE	CONTRACT NUMBER	PROJECT NUMBER
NONE	PP150969	8094

SHEET NUMBER: WA-H-221
REVISIONS: 0

LIGO-D960366-00-0 1

LIGOWAF.BOR

This document and the design it covers are the property of PARSONS. They are loaned only with the borrower's expressed written agreement that they will not be reproduced, copied, loaned, exhibited, or used in any other way, except by written consent from PARSONS to the borrower.