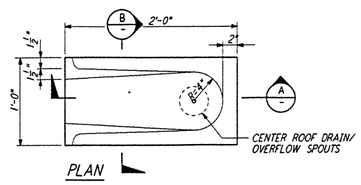

CONC SPLASH BLOCK (17) REF LA-A-425 LA-A-108
1½"=1'-0"

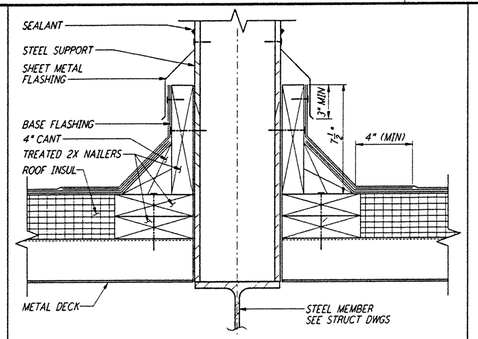

ROOF PENETRATION DETAIL (12) REF LA-A-425 LA-A-131
3"=1'-0"

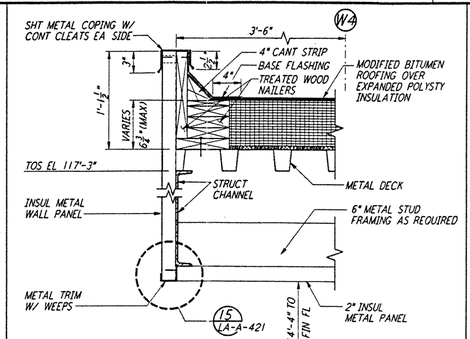

CANOPY EDGE (8) REF LA-A-425 LA-A-132
1½"=1'-0"

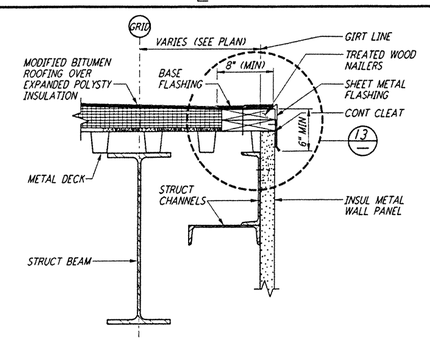

TYPICAL EAVE DETAIL (4) REF LA-A-425 LA-A-131 LA-A-132
1½"=1'-0"

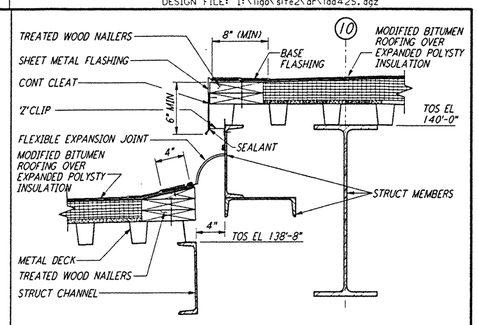

EXPANSION JOINT DETAIL (1) REF LA-A-425 LA-A-132
1½"=1'-0"

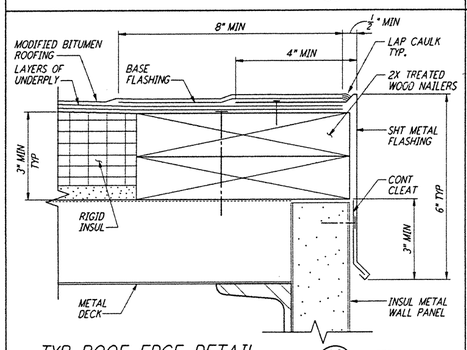

TYP ROOF EDGE DETAIL (13) REF LA-A-425
HALF FULL

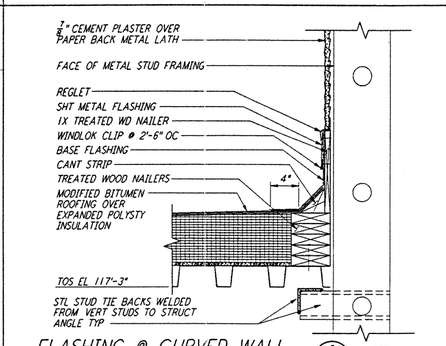

FLASHING @ CURVED WALL (9) REF LA-A-425 LA-A-132
1½"=1'-0"

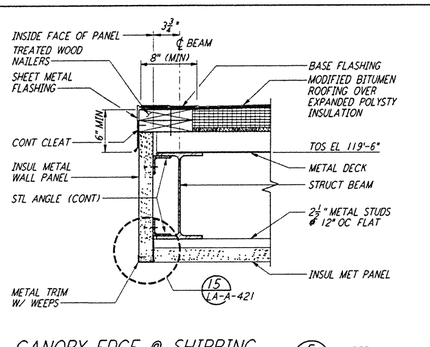

CANOPY EDGE @ SHIPPING (5) REF LA-A-425 LA-A-132 LA-A-163
1½"=1'-0"

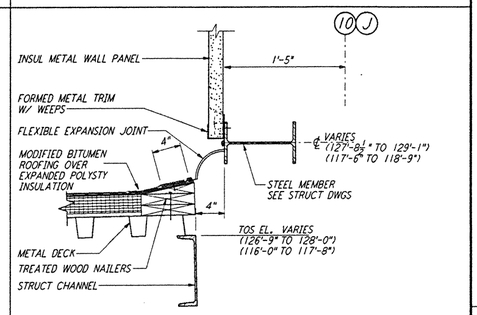

EXPANSION JOINT DETAIL (2) REF LA-A-425 LA-A-132
1½"=1'-0"

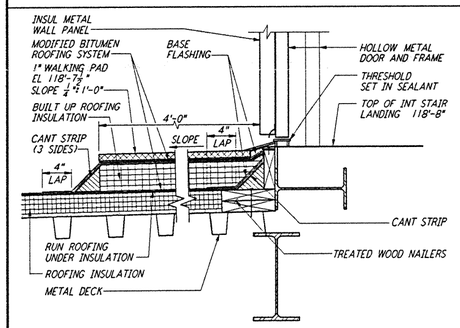

STOOP AT ROOF (18) REF LA-A-425 LA-A-110
1½"=1'-0"

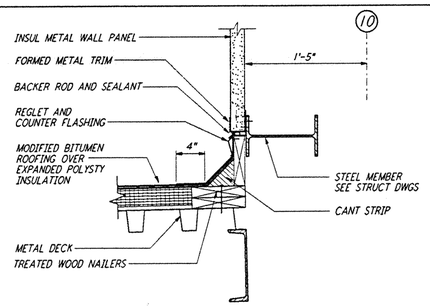

WALL TO ROOF FLASHING (14) REF LA-A-425 LA-A-132
1½"=1'-0"

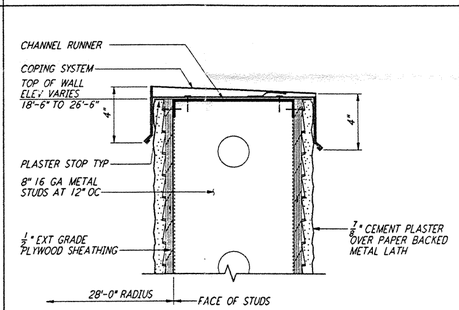

COPING @ CURVED WALL (10) REF LA-A-425 LA-A-132
3"=1'-0"

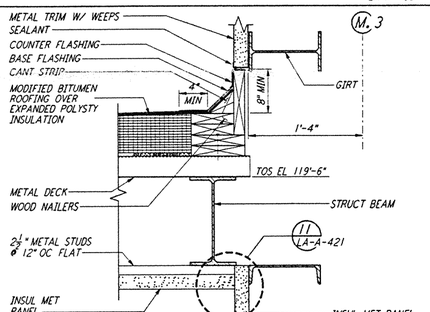

CANOPY SECTION @ SHIPPING (6) REF LA-A-425 LA-A-163
1½"=1'-0"

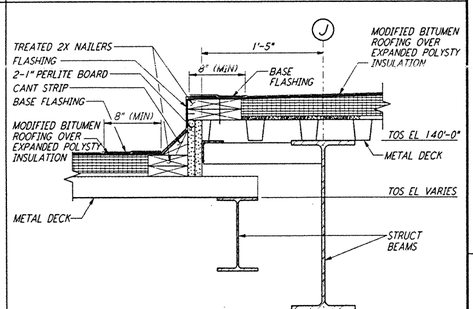

ROOF TRANSITION DETAIL (3) REF LA-A-425 LA-A-132
1½"=1'-0"

DETAIL (19) REF LA-A-425
1½"=1'-0"

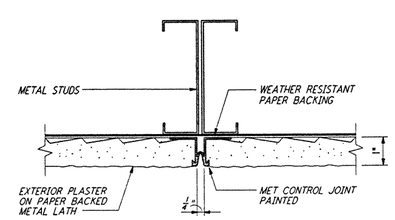

PLASTER CONTROL JOINT (15) REF LA-A-425 LA-A-163
HALF FULL

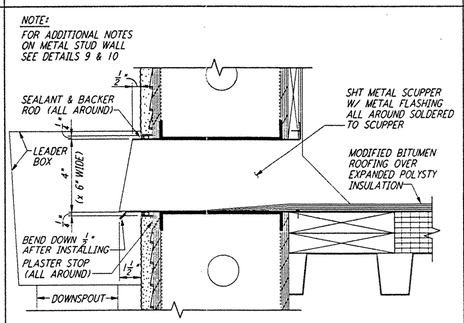

MET SCUPPER @ CURVED WALL (11) REF LA-A-425 LA-A-132
3"=1'-0"

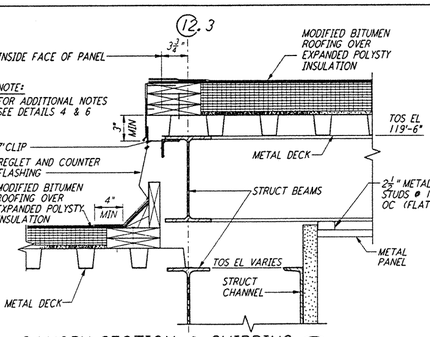

CANOPY SECTION @ SHIPPING (7) REF LA-A-425 LA-A-132
1½"=1'-0"

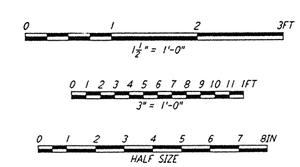

REFERENCES		REVISIONS						
DRAWING NO.	DESCRIPTION	NO.	DATE	BY	CHKD	ENGR	PROJ	DESCRIPTION

ISSUED FOR CONTRUCTION		
DRAWN	SH	11-15-96
CHECKED	TB	11-15-96
ENGINEER	SH	11-15-96
PROJ		11/15/96

PARSONS
100 WEST WALNUT STREET
PASADENA, CALIFORNIA

LIGO
CALIFORNIA INSTITUTE OF TECHNOLOGY
MASSACHUSETTS INSTITUTE OF TECHNOLOGY

LASER INTERFEROMETER
GRAVITATIONAL-WAVE OBSERVATORY
SITE NO.2 - LIVINGSTON, LOUISIANA

TITLE: ARCHITECTURAL ROOF AND MISCELLANEOUS EXTERIOR DETAILS

SCALE | CONTRACT NUMBER: PP150969 | PROJECT NUMBER: 8094
SHEET NUMBER: LA-A-425 | REVISIONS: 0

LIGO-0960902-00-D 1

LIGOLAF.BDR

This document and the design it covers are the property of PARSONS. They are loaned only with the borrower's expressed written agreement that they will not be reproduced, copied, loaned, exhibited, or used in any other way, except by written consent from PARSONS to the borrower.