DATE: 06/13/96 TIME: 20:04:32
DESIGN FILE: I:\ligo\site2\st\las109.dgz

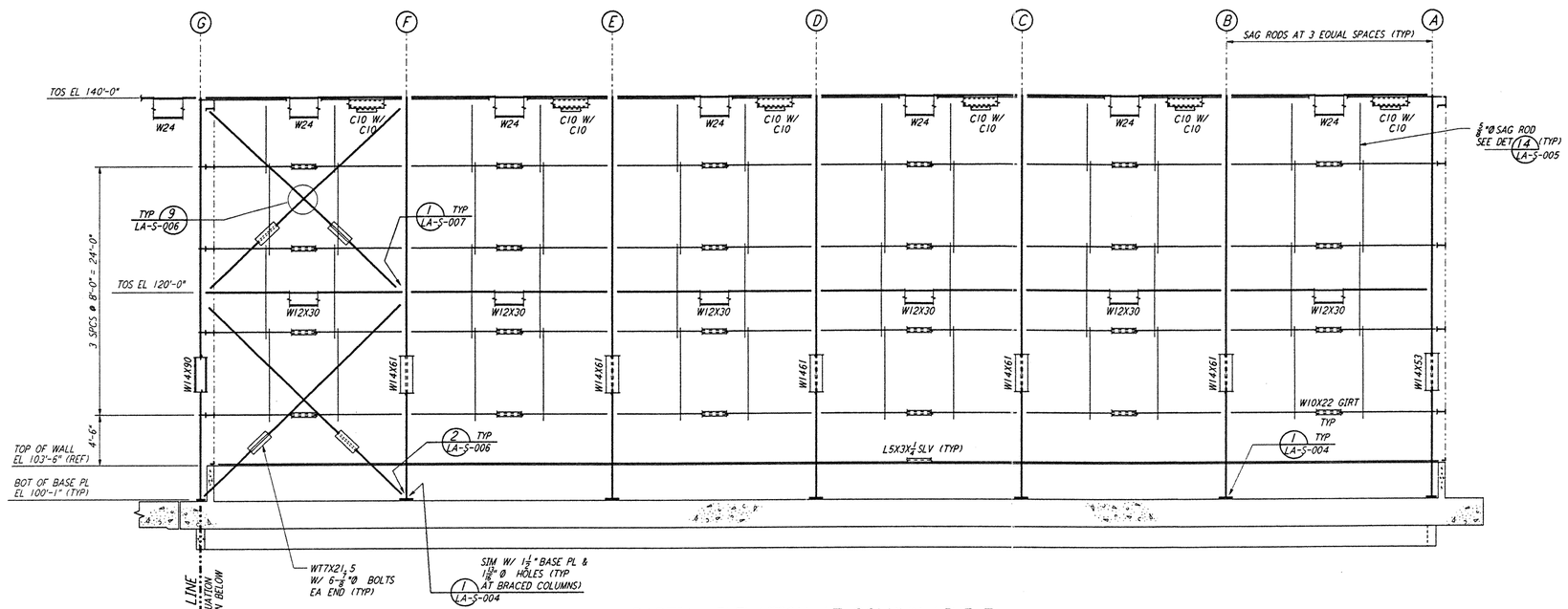

PARTIAL ELEVATION AT COLUMN LINE 7

3/16" = 1'-0"

NOTE:
1. FOR NOTES SEE DRAWING LA-S-107.

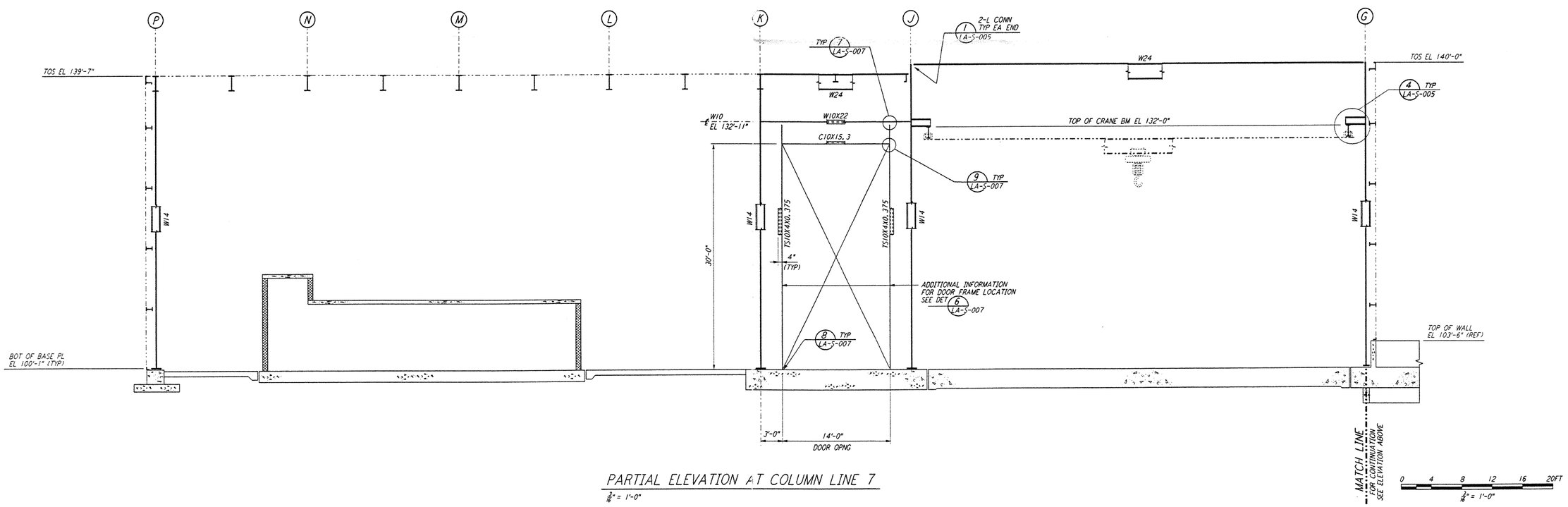

PARTIAL ELEVATION AT COLUMN LINE 7

3/16" = 1'-0"

REFERENCES		REVISIONS						
DRAWING NO.	DESCRIPTION	NO.	DATE	BY	CHKD	ENGR	PROJ	DESCRIPTION
		B	6-14-96	MCS				FINAL DESIGN REVIEW
		A	10-31-95				TDM	PRELIMINARY DESIGN REVIEW

DRAWN	MCS
CHECKED	
ENGINEER	
PROJ	

PARSONS
100 WEST WALNUT STREET
PASADENA, CALIFORNIA

LIGO
CALIFORNIA INSTITUTE OF TECHNOLOGY
MASSACHUSETTS INSTITUTE OF TECHNOLOGY

LASER INTERFEROMETER
GRAVITATIONAL-WAVE OBSERVATORY
SITE NO. 2 - LIVINGSTON, LOUISIANA

TITLE: STRUCTURAL CORNER STATION LVEA FRAMING ELEVATIONS SHEET 3

SCALE: AS NOTED | CONTRACT NUMBER: PP150969 | PROJECT NUMBER: 8094

SHEET NUMBER: LA-S-109 | REVISIONS: B

LIGO-D960925-B-O

LIGOLAF.BDR

This document and the design it covers are the property of PARSONS. They are loaned only with the borrower's expressed written agreement that they will not be reproduced, copied, loaned, exhibited, or used in any other way, except by written consent from PARSONS to the borrower.