DATE: 10/24:96 TIME: 12:25:54
DESIGN FILE: I:\ligo\site2\st\las402.dgz

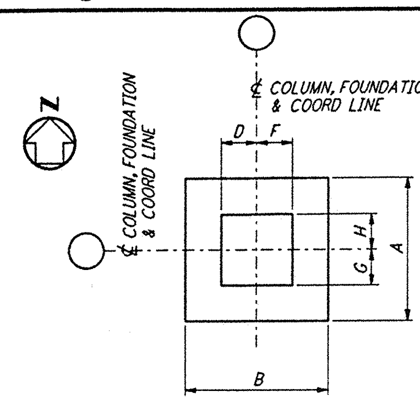


PLAN - TYPE A

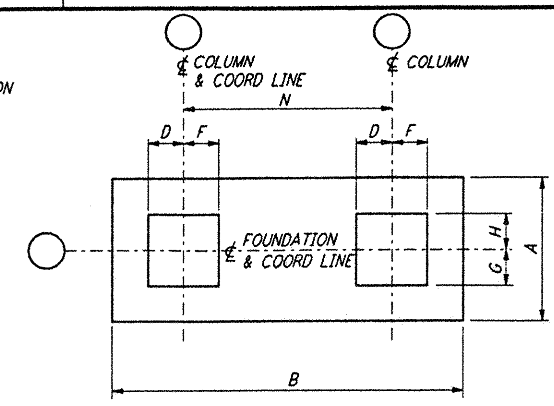


PLAN - TYPE B

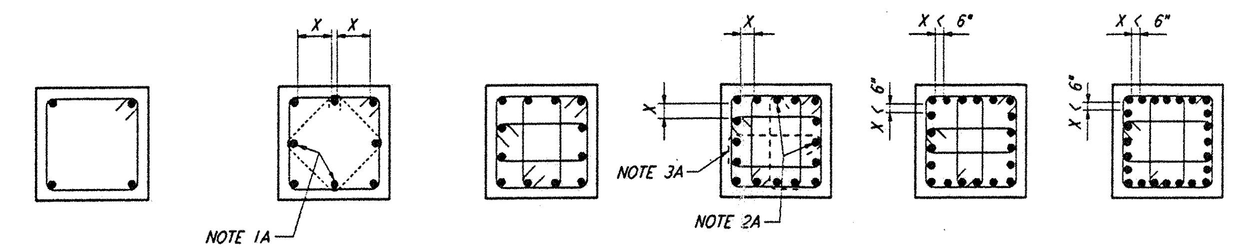


| 4 - BARS | 8 - BARS | 12 - BARS | 16 - BARS | 20 - BARS | 24 - BARS |
|---|---|---|---|---|---|
| TYPE A | TYPE B | TYPE C | TYPE D | TYPE E | TYPE F |

TIE ARRANGEMENT TYPE

TIE REINFORCEMENT NOTES:

1A. THESE BARS MUST BE TIED AS SHOWN BY DASHED LINES WHEN X DISTANCE IS OVER 6 INCHES.
2A. THESE BARS NEED NOT BE TIED WHEN X DISTANCE IS 6 INCHES OR LESS.
3A. ALTERNATE 90° HOOKS IN COLUMNS.

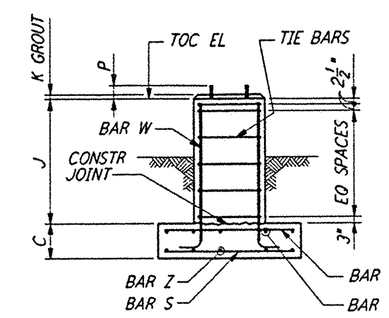


ELEV - TYPE 1

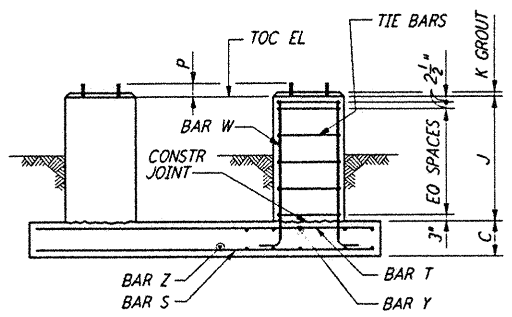


ELEV - TYPE 2

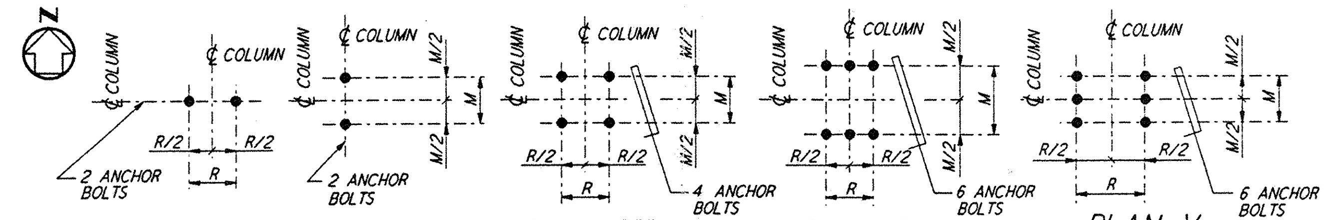


PLAN I PLAN II PLAN III PLAN IV PLAN V

ANCHOR BOLT PLAN

NOTES:

1. CONSTRUCTION SHALL COMPLY WITH ALL THE REQUIREMENTS OF THE GENERAL NOTES ON DRAWING LA-S-001.
2. THE BAR SPACING IS BASED ON CENTER TO CENTER OF TIE SET.
3. FOR ANCHOR BOLT DETAILS SEE DRAWING LA-S-003.

OSB - CORNER STATION

| FOUNDATION NO OF FDNS REQD | FOUNDATION LOCATION (COL LINES) | TOP OF CONC EL | FOUNDATION TYPE PLAN | FOUNDATION TYPE ELEV | DIMENSIONS A | B | C | D | F | G | H | J | K | M | R | N | ANCHOR BOLTS PER PIER ANCHOR BOLT PLAN | TYPE | NO PER PIER | SIZE Ø | L | P | REINFORCING PER FOUNDATION BAR S NO | BAR S SIZE | BAR Z NO | BAR Z SIZE | BAR T NO | BAR T SIZE | BAR Y NO | BAR Y SIZE | BAR W NO | BAR W SIZE | TIE BAR TYPE | TIE BAR SIZE | TIE BAR NO REQD | CONC CY | FDN LOC PLAN | REMARKS |
|---|---|---|---|---|---|---|---|---|---|---|---|---|---|---|---|---|---|---|---|---|---|---|---|---|---|---|---|---|---|---|---|---|---|---|---|---|---|---|---|
| 1 | L.3-16.3 | 100'-0" | A | 1 | 4'-6" | 4'-6" | 1'-0" | 10" | 10" | 10" | 10" | 2'-6" | 1" | 7" | 7" | — | III | 2 | 4 | 1" | 1'-4" | 4" | 5 | #5 | 5 | #5 | 5 | #5 | 5 | #5 | 8 | #6 | B | #4 | 5 | 1.0 | LA-S-102 | |
| 1 | L.3-15.3 | 100'-0" | A | 1 | 4'-6" | 4'-6" | 1'-0" | 10" | 10" | 10" | 10" | 2'-6" | 1" | 7" | 7" | — | III | 2 | 4 | 1" | 1'-4" | 4" | 5 | #5 | 5 | #5 | 5 | #5 | 5 | #5 | 8 | #6 | B | #4 | 5 | 1.0 | LA-S-102 | |
| 1 | N.3-15.3 | 100'-0" | A | 1 | 4'-6" | 4'-6" | 1'-0" | 10" | 10" | 10" | 10" | 2'-6" | 1" | 7" | 7" | — | III | 2 | 4 | 1" | 1'-4" | 4" | 5 | #5 | 5 | #5 | 5 | #5 | 5 | #5 | 8 | #6 | B | #4 | 5 | 1.0 | LA-S-102 | |
| 1 | V-15.3 | 100'-0" | A | 1 | 4'-6" | 4'-6" | 1'-0" | 10" | 10" | 10" | 10" | 1'-8" | 1" | 7" | 7" | — | III | 2 | 4 | 1" | 1'-4" | 4" | 5 | #5 | 5 | #5 | 5 | #5 | 5 | #5 | 8 | #6 | B | #4 | 4 | 1.0 | LA-S-102 | |
| 1 | J.3-14.3 | 100'-0" | A | 1 | 4'-0" | 4'-8" | 1'-0" | 10" | 10" | 10" | 10" | 1'-8" | 1" | 7" | 7" | — | III | 2 | 4 | 1" | 1'-4" | 4" | 5 | #5 | 5 | #5 | 5 | #5 | 5 | #5 | 8 | #6 | B | #4 | 4 | 1.0 | LA-S-102 | |
| 1 | L.3-14.3 | 100'-0" | A | 1 | 4'-6" | 4'-6" | 1'-0" | 10" | 10" | 10" | 10" | 1'-8" | 1" | 7" | 7" | — | III | 2 | 4 | 1" | 1'-4" | 4" | 5 | #5 | 5 | #5 | 5 | #5 | 5 | #5 | 8 | #6 | B | #4 | 4 | 1.0 | LA-S-102 | |
| 1 | J.3-13.3 | 100'-0" | A | 1 | 4'-0" | 4'-8" | 1'-0" | 10" | 10" | 10" | 10" | 1'-8" | 1" | 7" | 7" | — | III | 2 | 4 | 1" | 1'-4" | 4" | 5 | #5 | 5 | #5 | 5 | #5 | 5 | #5 | 8 | #6 | B | #4 | 4 | 1.0 | LA-S-102 | |
| 1 | K.3-13.3 | 100'-0" | A | 1 | 4'-6" | 4'-6" | 1'-0" | 10" | 10" | 10" | 10" | 1'-8" | 1" | 7" | 7" | — | III | 2 | 4 | 1" | 1'-4" | 4" | 5 | #5 | 5 | #5 | 5 | #5 | 5 | #5 | 8 | #6 | B | #4 | 4 | 1.0 | LA-S-102 | |
| 1 | L.3-13.3 | 100'-0" | A | 1 | 4'-6" | 4'-6" | 1'-0" | 10" | 10" | 10" | 10" | 1'-8" | 1" | 7" | 7" | — | III | 2 | 4 | 1" | 1'-4" | 4" | 5 | #5 | 5 | #5 | 5 | #5 | 5 | #5 | 8 | #6 | B | #4 | 4 | 1.0 | LA-S-102 | |
| 1 | M.3-13.3 | 100'-0" | A | 1 | 4'-6" | 4'-6" | 1'-0" | 10" | 10" | 10" | 10" | 1'-8" | 1" | 7" | 7" | — | III | 2 | 4 | 1" | 1'-4" | 4" | 5 | #5 | 5 | #5 | 5 | #5 | 5 | #5 | 8 | #6 | B | #4 | 4 | 1.0 | LA-S-102 | |
| 1 | L.3-12.3 | 100'-0" | A | 1 | 4'-6" | 4'-6" | 1'-0" | 10" | 10" | 10" | 10" | 1'-8" | 1" | 7" | 7" | — | III | 2 | 4 | 1" | 1'-4" | 4" | 5 | #5 | 5 | #5 | 5 | #5 | 5 | #5 | 8 | #6 | B | #4 | 4 | 1.0 | LA-S-102 | |
| 1 | K.3-11.3 | 100'-0" | A | 1 | 4'-6" | 4'-6" | 1'-0" | 10" | 10" | 10" | 10" | 1'-8" | 1" | 7" | 7" | — | III | 2 | 4 | 1" | 1'-4" | 4" | 5 | #5 | 5 | #5 | 5 | #5 | 5 | #5 | 8 | #6 | B | #4 | 4 | 1.0 | LA-S-102 | |
| 1 | L.3-11.3 | 100'-0" | A | 1 | 4'-6" | 4'-6" | 1'-0" | 10" | 10" | 10" | 10" | 1'-8" | 1" | 7" | 7" | — | III | 2 | 4 | 1" | 1'-4" | 4" | 5 | #5 | 5 | #5 | 5 | #5 | 5 | #5 | 8 | #6 | B | #4 | 4 | 1.0 | LA-S-102 | |
| 1 | L.3-17 | 100'-0" | A | 1 | 5'-0" | 5'-0" | 1'-0" | 10" | 10" | 10" | 10" | 2'-6" | 1" | 7" | 7" | — | III | 2 | 4 | 1" | 1'-4" | 4" | 6 | #5 | 6 | #5 | 6 | #5 | 6 | #5 | 8 | #6 | B | #4 | 5 | 1.2 | LA-S-102 | |
| 1 | M.3-17 | 100'-0" | A | 1 | 5'-0" | 5'-0" | 1'-0" | 10" | 10" | 10" | 10" | 2'-6" | 1" | 7" | 7" | — | III | 2 | 4 | 1" | 1'-4" | 4" | 6 | #5 | 6 | #5 | 6 | #5 | 6 | #5 | 8 | #6 | B | #4 | 5 | 1.2 | LA-S-102 | |
| 1 | N.3-17 | 100'-0" | A | 1 | 5'-0" | 5'-0" | 1'-0" | 10" | 10" | 10" | 10" | 1'-8" | 1" | 7" | 7" | — | III | 2 | 4 | 1" | 1'-4" | 4" | 6 | #5 | 6 | #5 | 6 | #5 | 6 | #5 | 8 | #6 | B | #4 | 4 | 1.2 | LA-S-102 | |
| 1 | N.3-16.3 | 100'-0" | A | 1 | 5'-0" | 5'-0" | 1'-0" | 10" | 10" | 10" | 10" | 2'-6" | 1" | 7" | 7" | — | III | 2 | 4 | 1" | 1'-4" | 4" | 6 | #5 | 6 | #5 | 6 | #5 | 6 | #5 | 8 | #6 | B | #4 | 5 | 1.2 | LA-S-102 | |
| 1 | P.3-16.3 | 100'-0" | A | 1 | 5'-0" | 5'-0" | 1'-0" | 10" | 10" | 10" | 10" | 1'-8" | 1" | 7" | 7" | — | III | 2 | 4 | 1" | 1'-4" | 4" | 6 | #5 | 6 | #5 | 6 | #5 | 6 | #5 | 8 | #6 | B | #4 | 4 | 1.2 | LA-S-102 | |
| 1 | R-16.3 | 100'-0" | A | 1 | 5'-0" | 5'-0" | 1'-0" | 10" | 10" | 10" | 10" | 1'-8" | 1" | 7" | 7" | — | III | 2 | 4 | 1" | 1'-4" | 4" | 6 | #5 | 6 | #5 | 6 | #5 | 6 | #5 | 8 | #6 | B | #4 | 4 | 1.2 | LA-S-102 | |
| 1 | S-16.3 | 100'-0" | A | 1 | 5'-0" | 5'-0" | 1'-0" | 10" | 10" | 10" | 10" | 1'-8" | 1" | 7" | 7" | — | III | 2 | 4 | 1" | 1'-4" | 4" | 6 | #5 | 6 | #5 | 6 | #5 | 6 | #5 | 8 | #6 | B | #4 | 4 | 1.2 | LA-S-102 | |
| 1 | W-16.3 | 100'-0" | A | 1 | 5'-0" | 5'-0" | 1'-0" | 10" | 10" | 10" | 10" | 1'-8" | 1" | 7" | 7" | — | III | 2 | 4 | 1" | 1'-4" | 4" | 6 | #5 | 6 | #5 | 6 | #5 | 6 | #5 | 8 | #6 | B | #4 | 4 | 1.2 | LA-S-102 | |
| 1 | R-14.3 | 100'-0" | A | 1 | 5'-0" | 5'-0" | 1'-0" | 10" | 10" | 10" | 10" | 1'-8" | 1" | 7" | 7" | — | III | 2 | 4 | 1" | 1'-4" | 4" | 6 | #5 | 6 | #5 | 6 | #5 | 6 | #5 | 8 | #6 | B | #4 | 4 | 1.2 | LA-S-102 | |
| 1 | S-14.3 | 100'-0" | A | 1 | 5'-0" | 5'-0" | 1'-0" | 10" | 10" | 10" | 10" | 1'-8" | 1" | 7" | 7" | — | III | 2 | 4 | 1" | 1'-4" | 4" | 6 | #5 | 6 | #5 | 6 | #5 | 6 | #5 | 8 | #6 | B | #4 | 4 | 1.2 | LA-S-102 | |
| 1 | T-14.3 | 100'-0" | A | 1 | 5'-0" | 5'-0" | 1'-0" | 10" | 10" | 10" | 10" | 1'-8" | 1" | 7" | 7" | — | III | 2 | 4 | 1" | 1'-4" | 4" | 6 | #5 | 6 | #5 | 6 | #5 | 6 | #5 | 8 | #6 | B | #4 | 4 | 1.2 | LA-S-102 | |
| 1 | U-14.3 | 100'-0" | A | 1 | 5'-0" | 5'-0" | 1'-0" | 10" | 10" | 10" | 10" | 1'-8" | 1" | 7" | 7" | — | III | 2 | 4 | 1" | 1'-4" | 4" | 6 | #5 | 6 | #5 | 6 | #5 | 6 | #5 | 8 | #6 | B | #4 | 4 | 1.2 | LA-S-102 | |
| 1 | V-14.3 | 100'-0" | A | 1 | 5'-0" | 5'-0" | 1'-0" | 10" | 10" | 10" | 10" | 1'-8" | 1" | 7" | 7" | — | III | 2 | 4 | 1" | 1'-4" | 4" | 6 | #5 | 6 | #5 | 6 | #5 | 6 | #5 | 8 | #6 | B | #4 | 4 | 1.2 | LA-S-102 | |
| 1 | M.3-12.3 | 100'-0" | A | 1 | 5'-0" | 5'-0" | 1'-0" | 10" | 10" | 10" | 10" | 1'-8" | 1" | 7" | 7" | — | III | 2 | 4 | 1" | 1'-4" | 4" | 6 | #5 | 6 | #5 | 6 | #5 | 6 | #5 | 8 | #6 | B | #4 | 4 | 1.2 | LA-S-102 | |
| 1 | N.3-12.3 | 100'-0" | A | 1 | 5'-0" | 5'-0" | 1'-0" | 10" | 10" | 10" | 10" | 1'-8" | 1" | 7" | 7" | — | III | 2 | 4 | 1" | 1'-4" | 4" | 6 | #5 | 6 | #5 | 6 | #5 | 6 | #5 | 8 | #6 | B | #4 | 4 | 1.2 | LA-S-102 | |
| 1 | M.6-10.3 | 100'-0" | A | 1 | 3'-0" | 3'-0" | 1'-0" | 10" | 10" | 10" | 10" | 1'-8" | 1" | 1'-0" | 1'-0" | — | III | 2 | 4 | 1" | 1'-4" | 4" | 4 | #5 | 4 | #5 | - | - | - | - | 8 | #6 | B | #4 | 4 | 0.5 | LA-S-102 | |
| 1 | M.6-11.3 | 100'-0" | A | 1 | 3'-0" | 3'-0" | 1'-0" | 10" | 10" | 10" | 10" | 1'-8" | 1" | 1'-0" | 1'-0" | — | III | 2 | 4 | 1" | 1'-4" | 4" | 4 | #5 | 4 | #5 | - | - | - | - | 8 | #6 | B | #4 | 4 | 0.5 | LA-S-102 | |
| 1 | V.1-18.4 | 100'-0" | A | 1 | — | — | — | 10" | 10" | 10" | 10" | 1'-8" | 1" | 8" | 1'-0" | — | III | 2 | 4 | 1" | 1'-4" | 4" | - | - | - | - | - | - | - | - | 8 | #6 | B | #4 | 4 | 0.5 | LA-S-102 | FOR ADD'L INFO SEE P/LA-S-405 |
| 1 | W-18.4 | 100'-0" | A | 1 | 3'-0" | 3'-0" | 1'-0" | 10" | 10" | 10" | 10" | 1'-8" | 1" | 7" | 7" | — | III | 2 | 4 | 1" | 1'-4" | 4" | 4 | #5 | 4 | #5 | - | - | - | - | 8 | #6 | B | #4 | 4 | 0.5 | LA-S-102 | |
| 1 | W.4-17.1 | 100'-0" | A | 1 | — | — | — | 10" | 10" | 10" | 10" | 1'-8" | 1" | 1'-0" | 8" | — | III | 2 | 4 | 1" | 1'-4" | 4" | - | - | - | - | - | - | - | - | 8 | #6 | B | #4 | 4 | 0.5 | LA-S-102 | FOR ADD'L INFO SEE P/LA-S-405 |
| 1 | W.4-18 | 100'-0" | A | 1 | 3'-0" | 3'-0" | 1'-0" | 10" | 10" | 10" | 10" | 1'-8" | 1" | 7" | 7" | — | III | 2 | 4 | 1" | 1'-4" | 4" | 4 | #5 | 4 | #5 | - | - | - | - | 8 | #6 | B | #4 | 4 | 0.5 | LA-S-102 | |

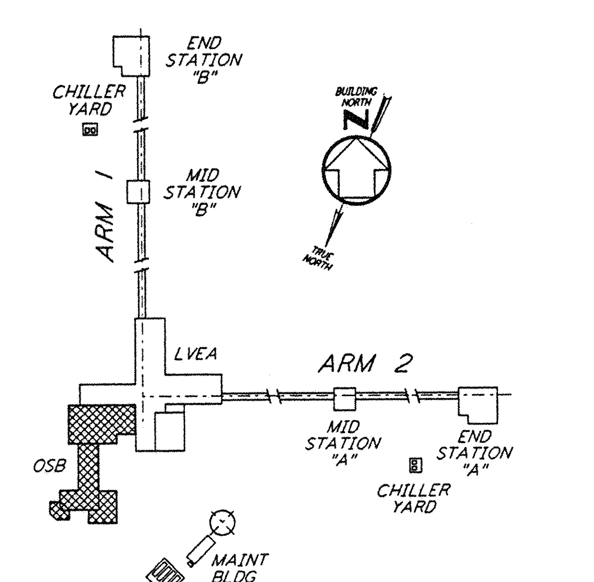


KEY PLAN

This document and the design it covers are the property of PARSONS. They are loaned only with the borrower's expressed written agreement that they will not be reproduced, copied, loaned, exhibited, or used in any other way, except by written consent from PARSONS to the borrower.

| REFERENCES DRAWING NO. | DESCRIPTION |
|---|---|

| REVISIONS NO. | DATE | BY | CHKD | ENGR | PROJ | DESCRIPTION |
|---|---|---|---|---|---|---|

| 0 ISSUED FOR CONSTRUCTION | | |
|---|---|---|
| DRAWN | MCS | 11-15-96 |
| CHECKED | (signature) | 11-15-96 |
| ENGINEER | (signature) | 11-15-96 |
| PROJ | (signature) | 11/15/96 |

STATE OF LOUISIANA SAMIR A. LAWRENCE REG. No. 25897 REGISTERED PROFESSIONAL ENGINEER IN CIVIL ENGINEERING 11-13-96

PARSONS
100 WEST WALNUT STREET
PASADENA, CALIFORNIA

LIGO
CALIFORNIA INSTITUTE OF TECHNOLOGY
MASSACHUSETTS INSTITUTE OF TECHNOLOGY

LASER INTERFEROMETER
GRAVITATIONAL-WAVE OBSERVATORY
SITE NO. 2 - LIVINGSTON, LOUISIANA

TITLE: STRUCTURAL CORNER STATION - OSB FOUNDATION SCHEDULE AND DETAILS SHEET 1

SCALE: NONE | CONTRACT NUMBER: PP150969 | PROJECT NUMBER: 8094
SHEET NUMBER: LA-S-402 | REVISIONS: 0

LIGO-D960954-00-D

LIGOLAF.BDR