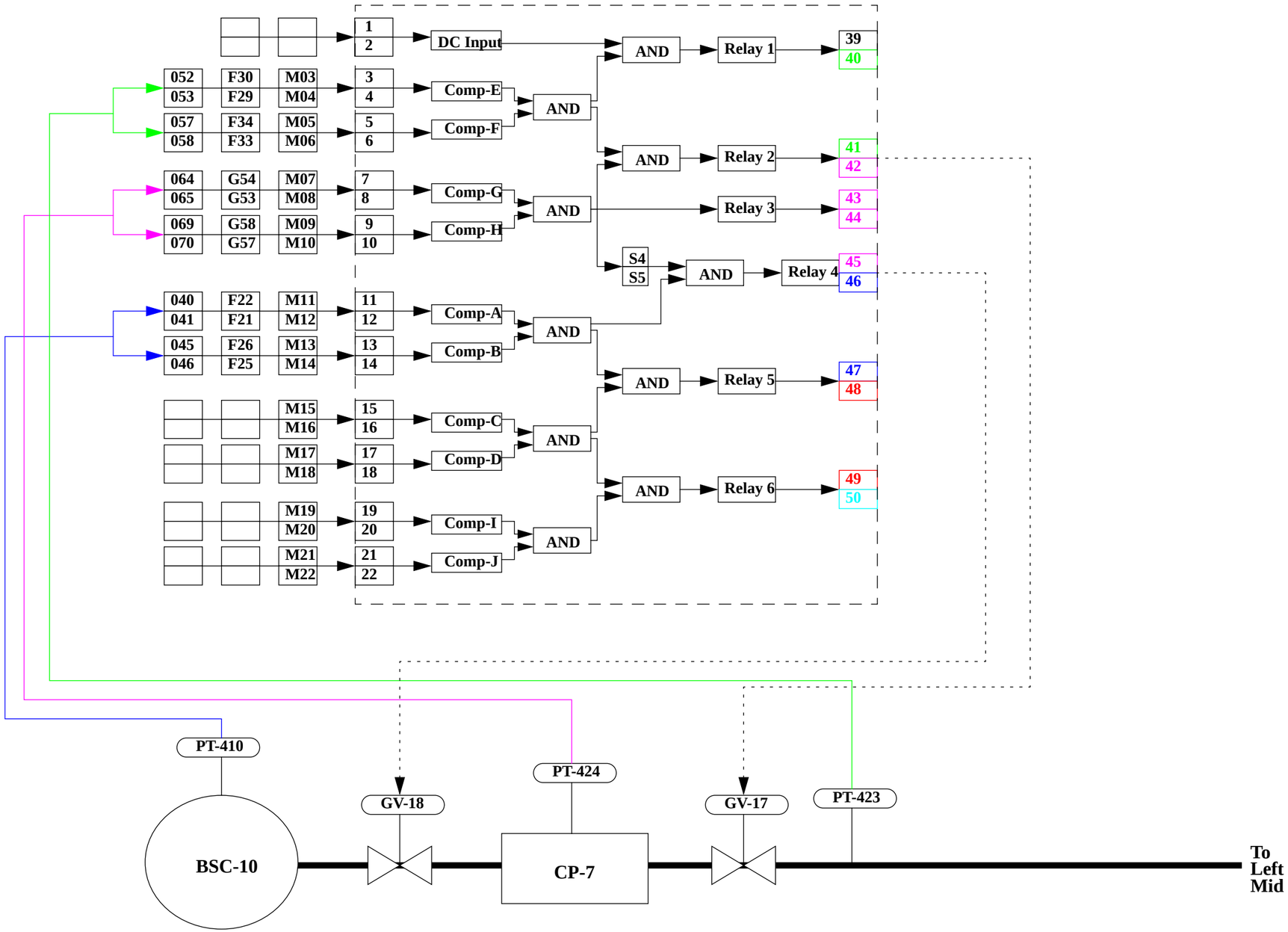

NOTES:

1) Not all terminal block connections are shown; see left mid station drawing set for detailed connections.
2) Switches S4 and S5 should be set with switch lever to rear of module.
3) Relays 1, 3, 5 and 6 are not used/connected.
4) Comparators A, C and E are connected to Pirani gauges; thresholds should be set to 400mV.
5) Comparators B, D and F are connected to cold cathode gauges; thresholds should be set to 6V.

DWG. NO.	DESCRIPTION	DWG. NO.	DESCRIPTION
REFERENCE DRAWINGS			

UNLESS OTHERWISE SPECIFIED
DIMENSIONS ARE IN INCHES
TOLERANCES:
FRACTIONAL ±
ANGULAR MACH ± BEND ±
TWO PLACE DECIMAL ±
THREE PLACE DECIMAL ±
FINISHED SURFACE RMS
BREAK CORNERS ON OUT:
REMOVE ALL BURRS

DO NOT SCALE THIS DRAWING
USED ON:
NEXT ASS'Y:

REV	DESCRIPTION	SHEETS EFFECTED	DATE
	Initital Release per ECN E970001-00-C		
ISSUE DESCRIPTION			

CURRENT REVISION APPROVAL

		GROUP	SIGNATURE	DATE
DRAWN	R. Bork			
CHECKED				
		DCC		

LIGO CALIFORNIA INSTITUTE OF TECHNOLOGY MASSACHUSETTS INSTITUTE OF TECHNOLOGY

VCMS Electrical Diagram
WA Left End Station
GV Interlock Module Connections

SCALE	SIZE	DWG. NO.	REV.
	B	D961384-A-C	
CAD FILE SCALE	SHEET STD		VER. D1