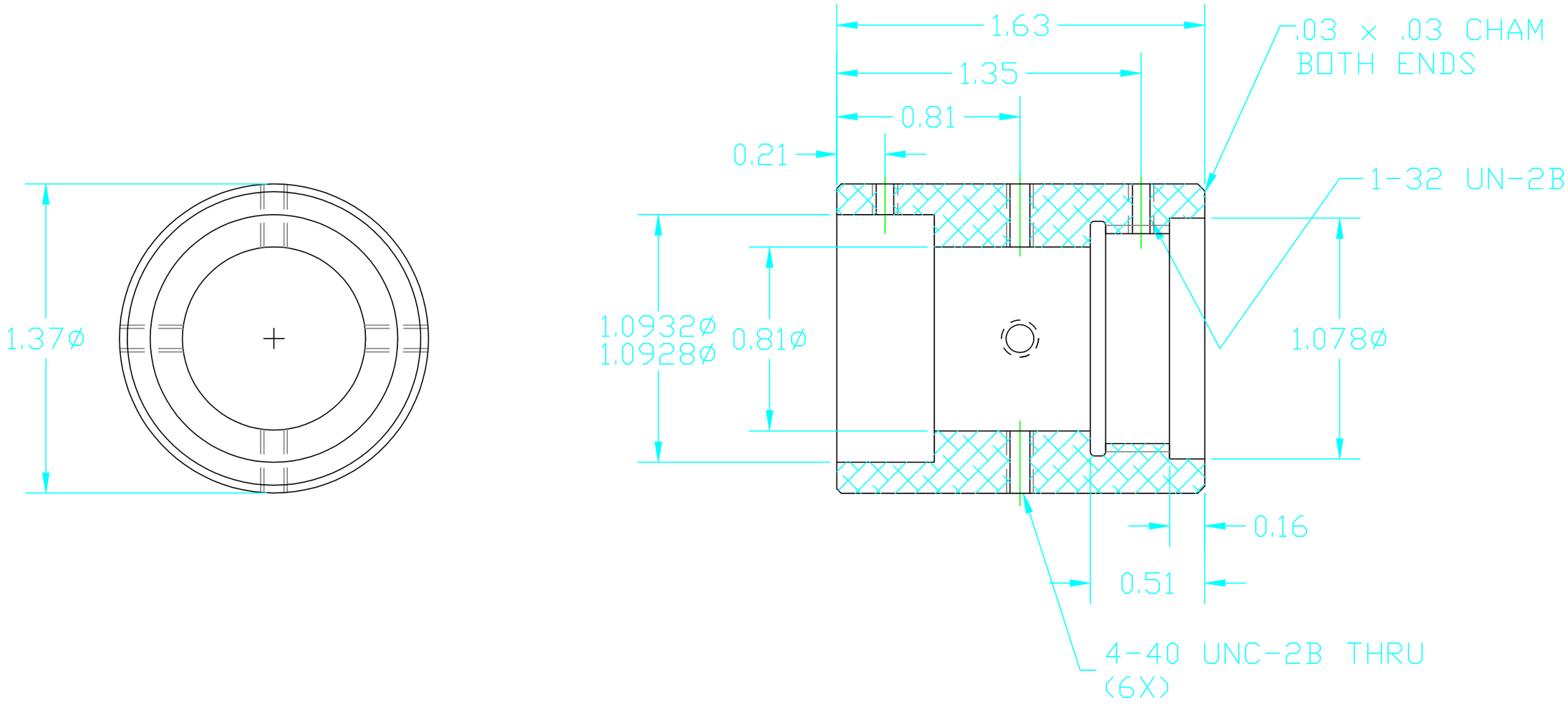

UNLESS OTHERWISE SPECIFIED
DIMENSIONS ARE IN INCHES

TOLERANCES:
FRACTIONAL ±1/16(.16)
ANGULAR ± 1°
TWO PLACE DECIMAL ±.01(.025)
THREE PLACE DECIMAL ± .005(.013)

FINISHED SURFACE RMS 63
BREAK CORNERS IN: OUT: .02
REMOVE ALL BURRS

MATERIAL:	HEAT TREAT:	FINISH:
302/304 SS	-	-

DWG. NO.	DESCRIPTION
REFERENCE DRAWINGS	

USED ON: D970102/D970156/D970161 NEXT ASS'Y: -

REV	DESCRIPTION	DCC	SYS	DET	CDS	VE	CC	BT	CHECK	DRWN	DATE
A	INITIAL RELEASE									MASON	5/98
00	PRE-RELEASE									K.MASON	4/29/97

ISSUE DESCRIPTION

LIGO
CALIFORNIA INSTITUTE OF TECHNOLOGY
MASSACHUSETTS INSTITUTE OF TECHNOLOGY

BEARING HOUSING
LIGHT SOURCE ASSY.
OPTICAL LEVER
-

CAD FILE	SIZE	DWG. NO.
D970105-A.DWG	B	D970105-A-D
SCALE 2:1		SHEET 1 OF 1