NOTES:

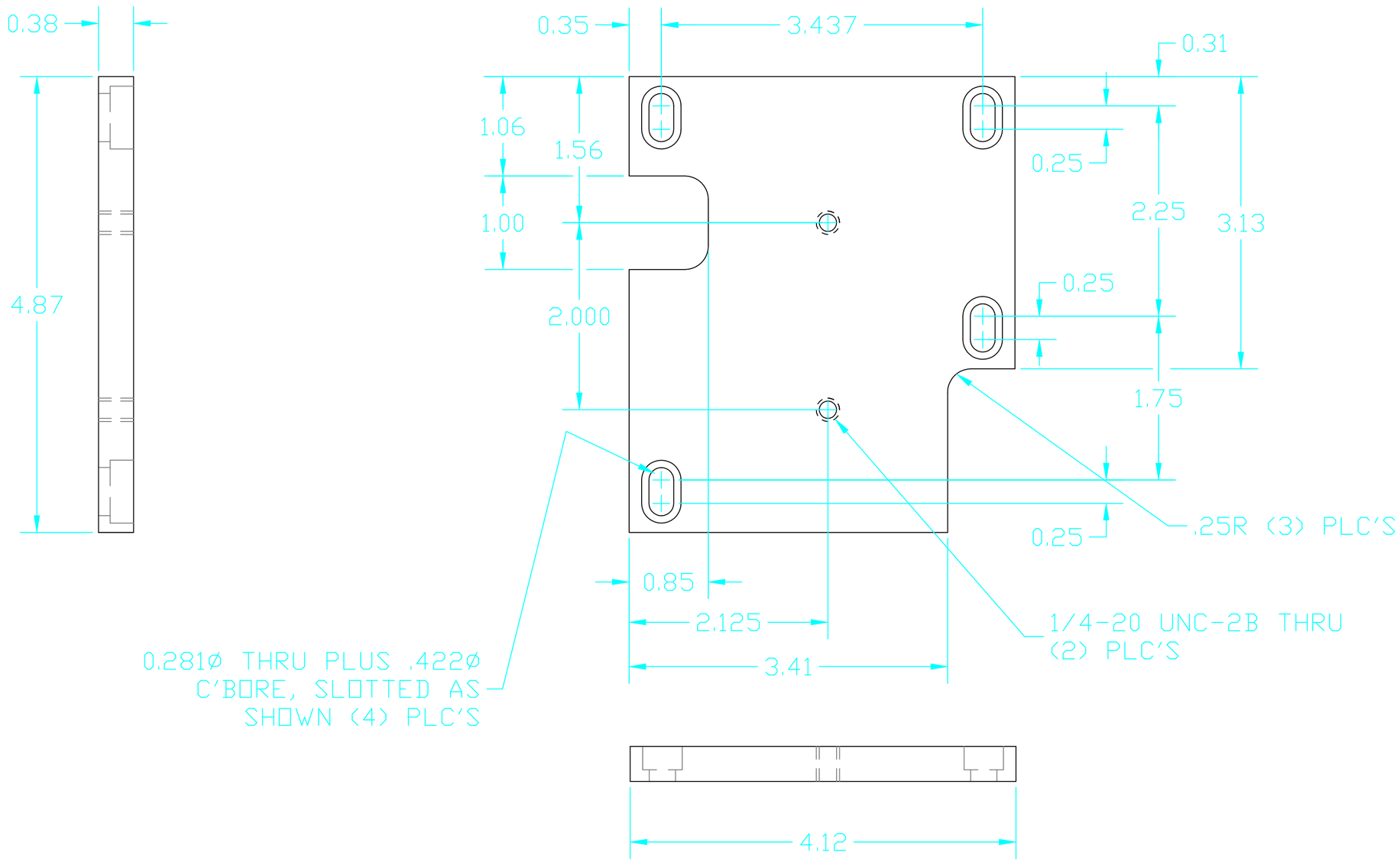

REF	QTY	PART or DRWG No.	CDS	MATERIAL

PARTS and MATERIAL LIST

DWG. NO.	DESCRIPTION
REFERENCE DRAWINGS	

UNLESS OTHERWISE SPECIFIED
DIMENSIONS ARE IN FEET [cm]

TOLERANCES:
FRACTIONAL ±1/16(.16)
ANGULAR ± 1°
TWO PLACE DECIMAL ±.01(.025)
THREE PLACE DECIMAL ± .005(.013)

FINISHED SURFACE RMS 63
BREAK CORNERS:.02
REMOVE ALL BURRS

MATERIAL:	HEAT TREAT:	FINISH:
6061-T6 ALUM.	–	–

USED ON: D970157-00-D | NEXT ASS'Y: –

REV	DESCRIPTION	DCC	SYS	DET	CDS	VE	CC	BT	CHECK	DRWN	DATE
A	INITIAL RELEASE									MASON	5/98
00	PRE-RELEASE									K.MASON	5/5/97

ISSUE DESCRIPTION

CALIFORNIA INSTITUTE OF TECHNOLOGY
MASSACHUSETTS INSTITUTE OF TECHNOLOGY

DETECTOR BASE PLATE
POSITION DETECTOR ASSY.
OPTICAL LEVER

CAD FILE	SIZE	DWG. NO.
D970159-A.DWG	C	D970159-A-D

SCALE FULL | SHEET 1 of 1