NOTES: (UNLESS OTHERWISE SPECIFIED)

1. MAY BE PURCHASED FROM:
   McMaster Carr Supply
   Los Angeles
   (562) 692-5911
2. CLEAN & BAKE PER LIGO-E960022-03.

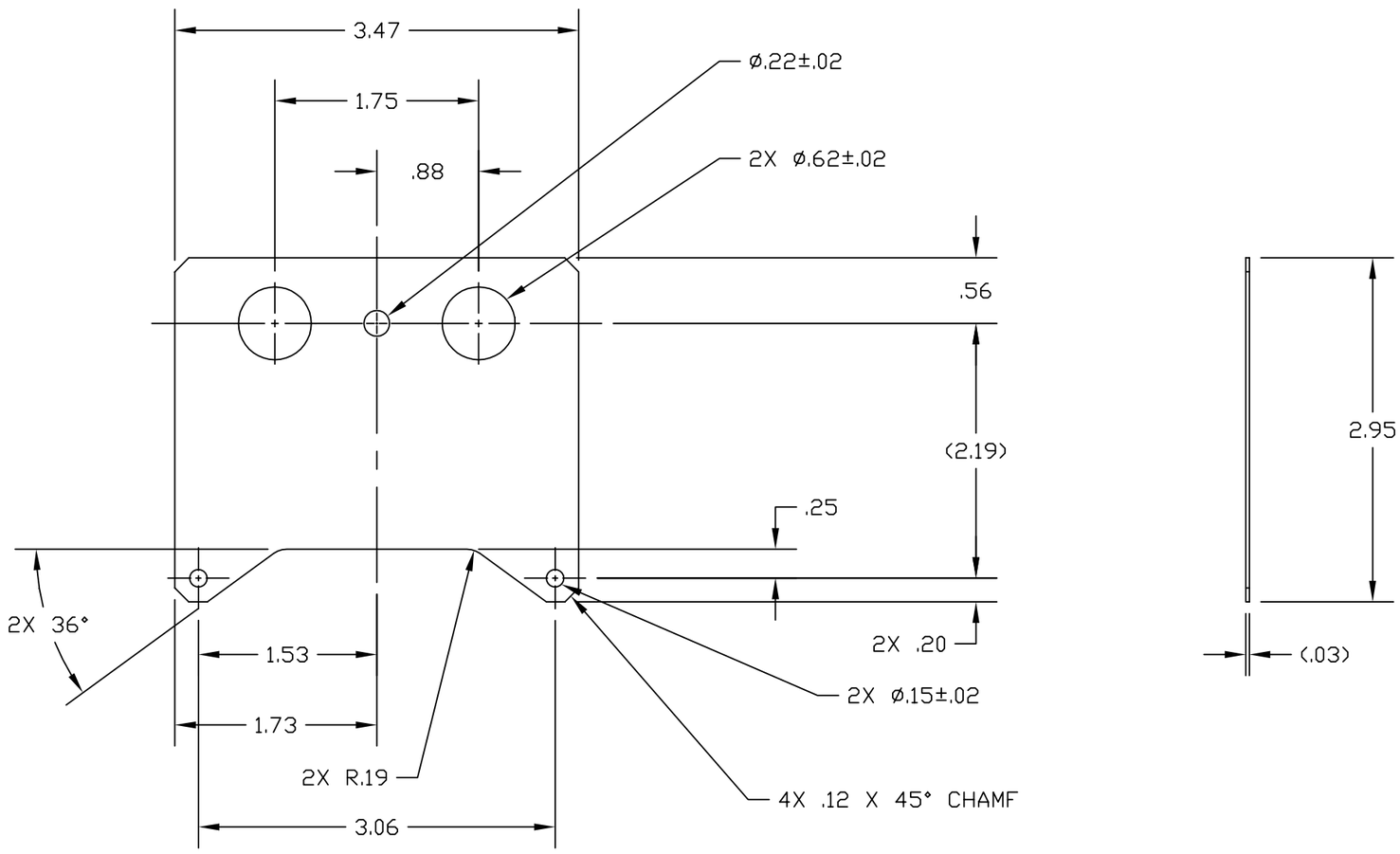

UNLESS OTHERWISE SPECIFIED
DIMENSIONS ARE IN INCHES

TOLERANCES:
FRACTIONAL ±
ANGULAR ±
ANGULARMACH ± BEND ±
TWO PLACE DECIMAL ± .03
THREE PLACE DECIMAL ±
FINISHED SURFACE RMS
BREAK CORNERS IN OUT:
REMOVE ALL BURRS

MATERIAL: .03 VITON SHEET (1)
HEAT TREAT: (2)
FINISH:

DWG. NO.	DESCRIPTION
REFERENCE DRAWINGS	

USED ON:
NEXT ASS'Y: D970171

REV	DESCRIPTION	DCC	SYS	DET	CDS	VE	CC	BT	DRWN	CHECK	DATE
B	DCN E970059								CONLEY		
A	DCN E970007								CONLEY	COYNE	4-29-97

ISSUE DESCRIPTION

LIGO CALIFORNIA INSTITUTE OF TECHNOLOGY
MASSACHUSETTS INSTITUTE OF TECHNOLOGY

BEAM SPLITTER OPTIC CARRIER
PROTECTIVE SHEET

CAD FILE: D970170-B.dwg
SIZE: B
DWG. NO.: D970170-B-D
SCALE: NTS
SHEET: 1 OF 1