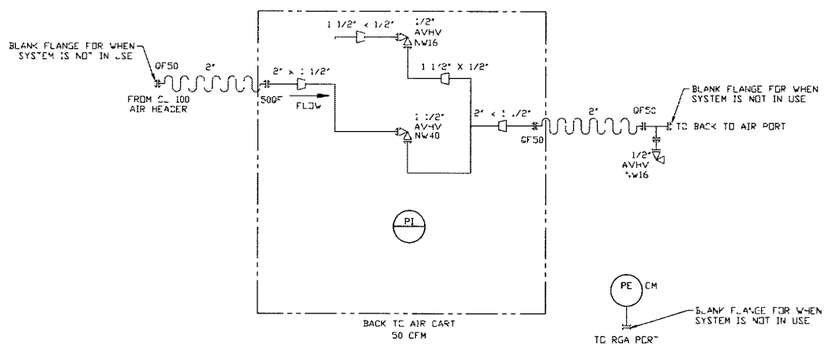

6 REQ'D
4 - REQ'D WA
2 - REQ'D LA

REF PSI DWG V049-4-168 3

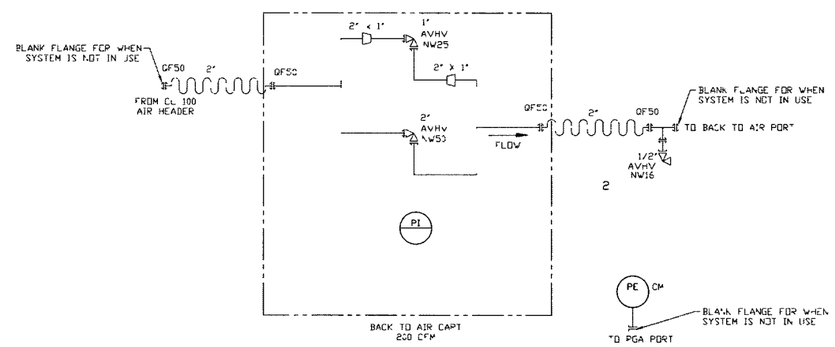

2 REQ'D
1 - REQ'D WA
1 - REQ'D LA

REF PSI DWG V049-4-175 3

ELECTRONIC COPY

LIGO-D970331-03-V

PROPRIETARY AND CONFIDENTIAL
THIS DOCUMENT CONTAINS PROPRIETARY INFORMATION BELONGING TO PROCESS SYSTEMS INTERNATIONAL, INC OR ITS AFFILIATED COMPANIES AND SHALL BE USED ONLY FOR THE PURPOSE FOR WHICH IT WAS SUPPLIED. IT SHALL NOT BE COPIED, REPRODUCED OR OTHERWISE USED, NOR SHALL SUCH INFORMATION BE FURNISHED IN WHOLE, OR IN PART TO OTHERS EXCEPT IN ACCORDANCE WITH THE TERMS OF ANY AGREEMENT UNDER WHICH IT WAS SUPPLIED OR WITH THE PRIOR WRITTEN CONSENT OF PROCESS SYSTEMS INTERNATIONAL, INC AND SHALL BE RETURNED UPON REQUEST

DWG NO	DESCRIPTION	DWG NO	DESCRIPTION
V049-0-001	P & ID LEGEND		

REFERENCE DRAWINGS

UNLESS OTHERWISE SPECIFIED
DIMENSIONS ARE IN INCHES
TOLERANCES
FRACTIONAL ±
ANGULAR:MACH ±0°-30' BEND ±2°
TWO PLACE DECIMAL ± .01
THREE PLACE DECIMAL ± .005
FINISHED SURFACE RMS
BREAK CORNERS IN- OUT-
REMOVE ALL BURRS

DO NOT SCALE THIS DRAWING

USED ON

NEXT ASS'Y

REV	DESCRIPTION	CHKD	DRWN	DATE	DED#
3	AS-BUILT		LD	08 25 98	0628
2	REVISED AS BUILT	REC	RH	12/12/98	0590
1	REISSUED FOR FDR UPDATE	DMcW SM	DA	6/11/97	0499
0	ISSUE FOR FDR UPDATE	DMcW TS RJW		10 25 96	0309

ISSUE DESCRIPTION

PROCESS SYSTEMS INTERNATIONAL INC.
20 WALKUP DR WESTBOROUGH, MASSACHUSETTS 01581 USA

PIPING & INSTRUMENTATION DIAGRAM
LIGO VACUUM EQUIPMENT
CHAMBER REPRESSURIZATION SYSTEM
50 CFM & 200 CFM

CAD FILE	SIZE	DWG NO	REV
V0490007	D	V049-0-007	3

SCALE NONE SHEET 1 OF 1

EDUCATION MISSION USE FOR COMMERCIAL USE

Jan 15, 1998 - 15:21:49