REVISIONS			
REV.	DESCRIPTION	DATE	APPROVED
A	SEE ECN# D972118-A FOR CHANGE LIST	11-03-97	T. THOMPSON
B	SEE ECN# D972118-B FOR CHANGE LIST	4-15-98	T. THOMPSON

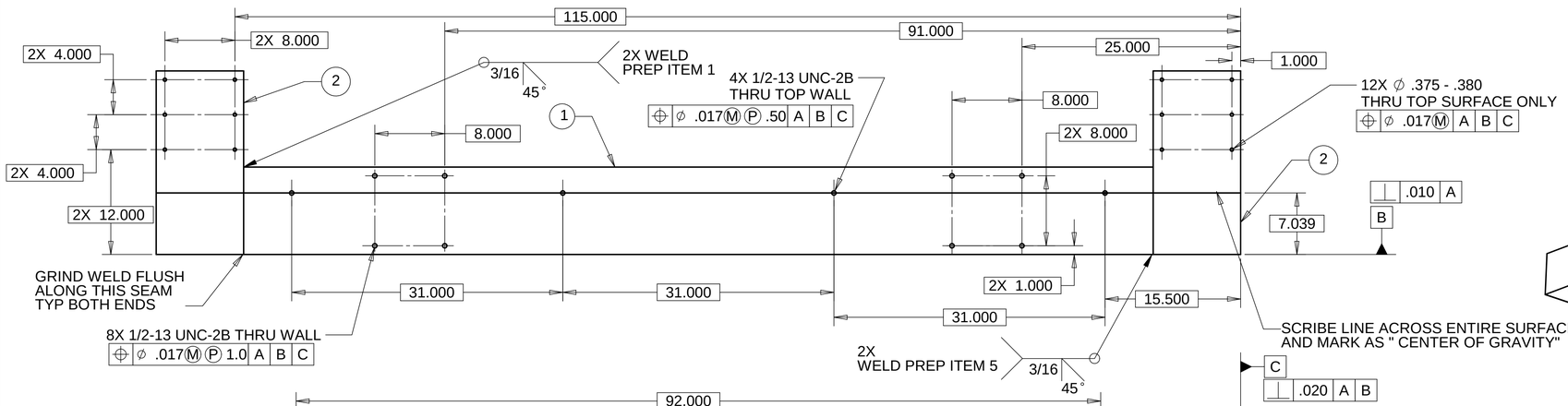

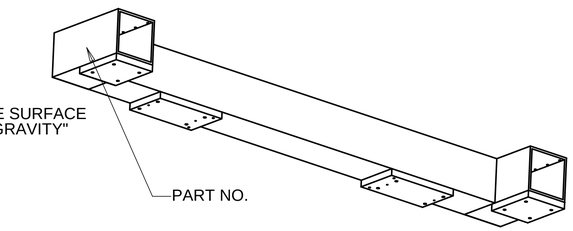

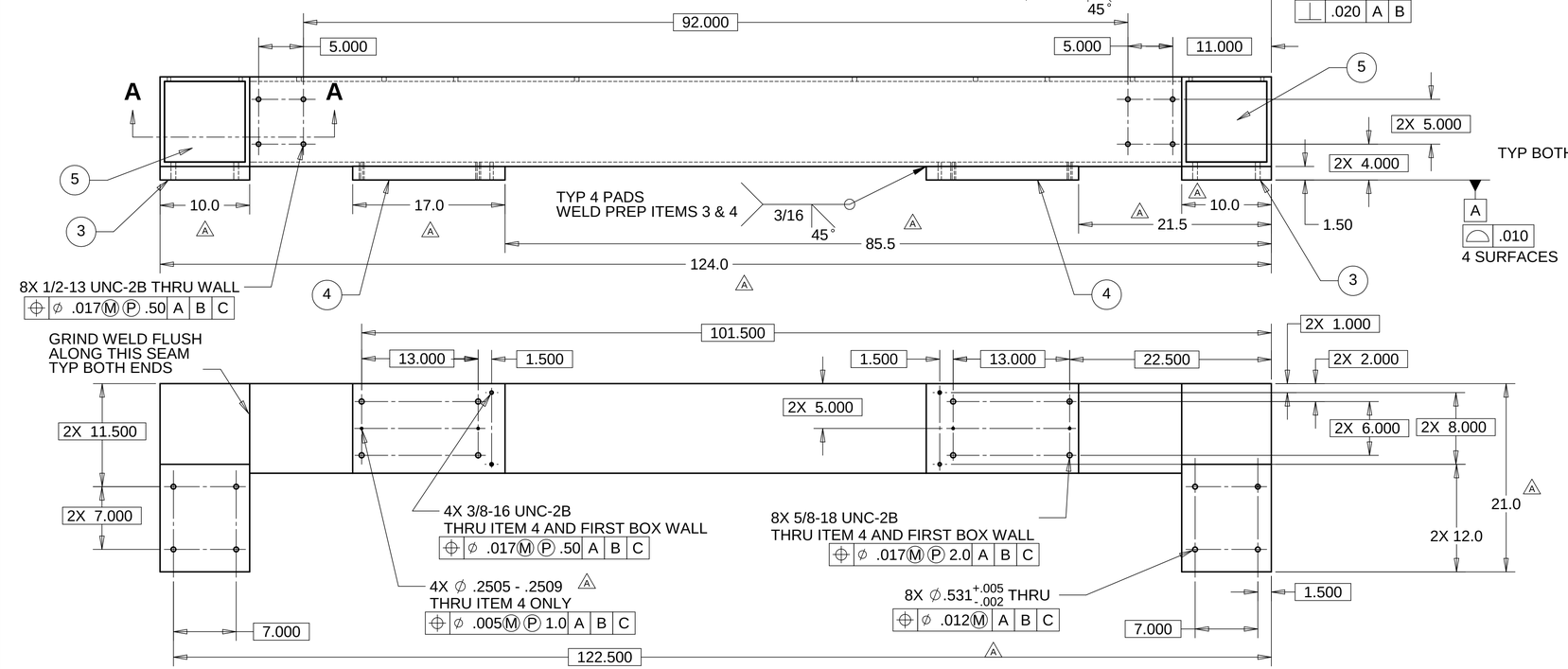

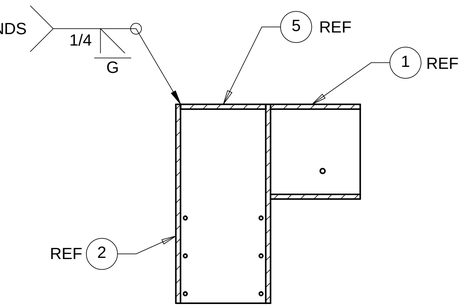

SECTION A-A
TYP BOTH ENDS

NOTES: UNLESS OTHERWISE SPECIFIED

1. ALL DIMENSIONS IN INCHES
2. DIMENSIONS AND TOLERANCING PER ASME Y14.5M-1994
3. SURFACE TEXTURE PER ANSI/ASME B 46.1-1985
4. REMOVE ALL BURRS AND BREAK SHARP EDGES TO A MAXIMUM OF .015
5. ALL INSIDE CORNERS TO BE .015 RADIUS MAX
6. COUNTERSINK 82 DEGREES ALL TAPPED HOLES TO MAJOR DIAMETER
7. COUNTERSINK 82 DEGREES APPROXIMATELY .015 DEEP ALL DRILLED HOLES
8. PARTS TO BE THOROUGHLY CLEANED TO REMOVE ALL OIL, GREASE, DIRT AND CHIPS
9. PART NUMBER (DRAWING NO. PLUS DASH NO. PLUS SERIAL NO.) TO BE CLEARLY MARKED ON THE PART ITSELF.
10. PAINT:
    ALL VISIBLE SURFACES
    MEDIUM TEXTUREDBLUE SHERWIN WILLIAMS (POLANE (R) T-PLUS, POLYURETHANE ENAMEL,) #SW-F63TX-L2822-5864.
    PRIME WITH SHERMAN-WILLIAMS INDUSTRIAL WASH PRIMER P60G2

WEIGHT: 1077.7 lb.

ITEM NO.	QTY.	DESCRIPTION	MATERIAL
1	1	BOX BEAM, 10 X 10 X .50 WALL	A500 GRADE B STEEL
2	2	BOX BEAM, 10 X 10 X .50 WALL	A500 GRADE B STEEL
3	2	MOUNTING PAD	A36 STEEL
4	2	MOUNTING PAD	A36 STEEL
5	2	BOX CLOSURE PLATE, .50 THK, CUT TO FIT INTO BOX BEAM	A36 STEEL

PARTS LIST

UNLESS OTHERWISE SPECIFIED:
DIMENSIONS ARE IN INCHES
-TOLERANCES-
DECIMALS
.X = +/- .1
.XX = +/- .03
.XXX = +/- .010
ANGULAR = +/- 30'
SURFACE FINISH = 250

CAD GENERATED DRAWING,
DO NOT MANUALLY UPDATE
DO NOT SCALE DRAWING

FINISH

PART NO. D972118-1

	SIGNATURE	DATE
DESIGNED	ROGER L. SMITH	5-28-97
DRAWN	ROGER L. SMITH	5-28-97
CHECKED	HARRY SALAZAR	7-14-97
ENGR.	T. THOMPSON	7-14-97
APPROVED	T. THOMPSON	7-14-97

HYTEC, INC

TITLE
LIGO
BSC
CROSSBEAM WELDMENT

DWG. NO. D972118 | SIZE D | SHEET NO. 1 of 1

SCALE 1/8 | REVISION B