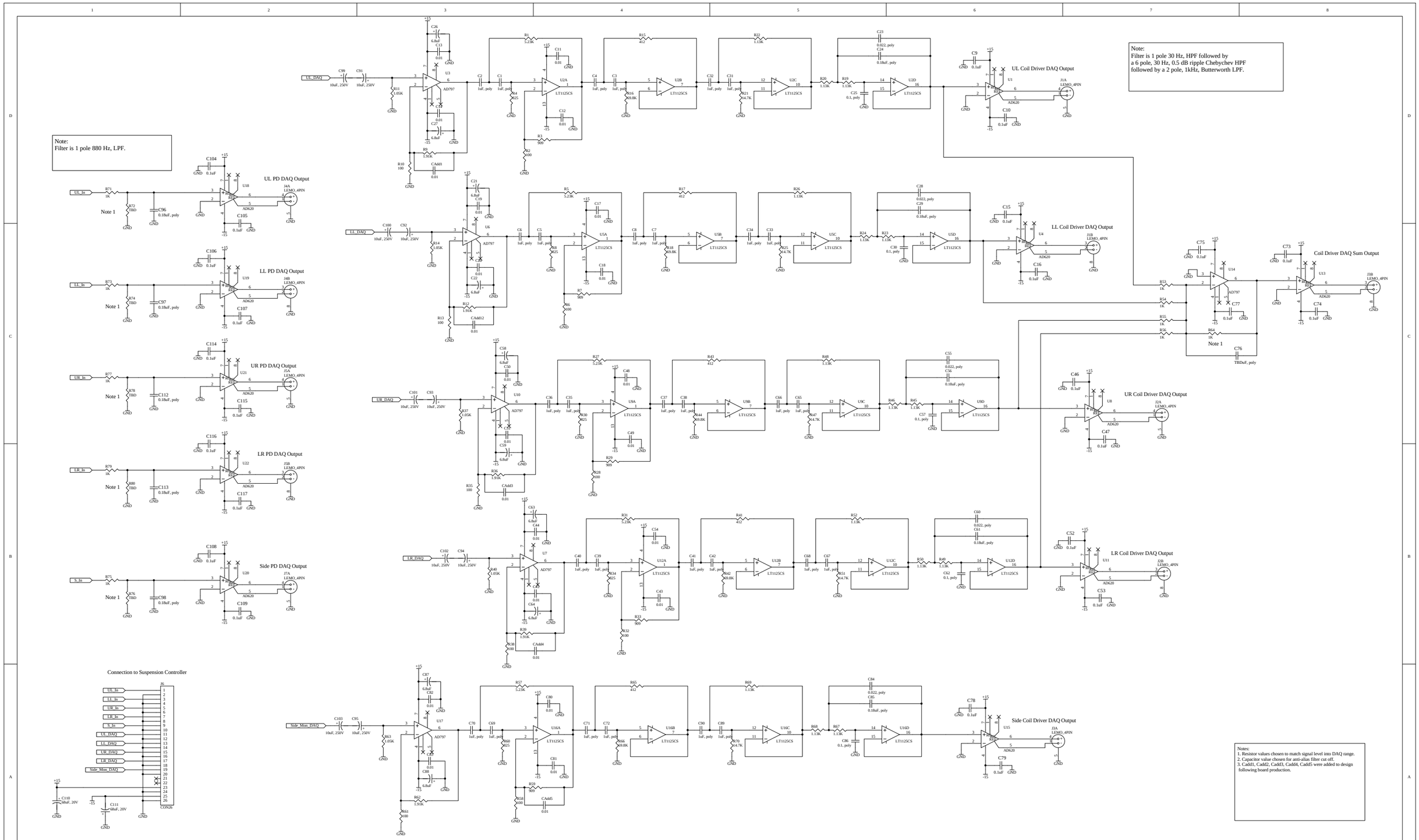
Note:
Filter is 1 pole 30 Hz, HPF followed by
a 6 pole, 30 Hz, 0.5 dB ripple Chebychev HPF
followed by a 2 pole, 1kHz, Butterworth LPF.
Note:
Filter is 1 pole 880 Hz, LPF.
UL Coil Driver DAQ Output
LL Coil Driver DAQ Output
UR Coil Driver DAQ Output
LR Coil Driver DAQ Output
Side Coil Driver DAQ Output
Coil Driver DAQ Sum Output
UL PD DAQ Output
LL PD DAQ Output
UR PD DAQ Output
LR PD DAQ Output
Side PD DAQ Output
Connection to Suspension Controller
Notes:
1. Resistor values chosen to match signal level into DAQ range.
2. Capacitor value chosen for anti-alias filter cut off.
3. Cadd1, Cadd2, Cadd3, Cadd4, Cadd5 were added to design following board production.
Suspension Controller DAQ Daughter Board
LIGO Project
California Institute of Technology
Massachusetts Institute of Technology
Size: D
Number: D980234
Revision: 01
Engineer: J. Heefner
Sheet 1 of 1
LIGO