1. CLEAR ANODIZE PER MIL-A-8625

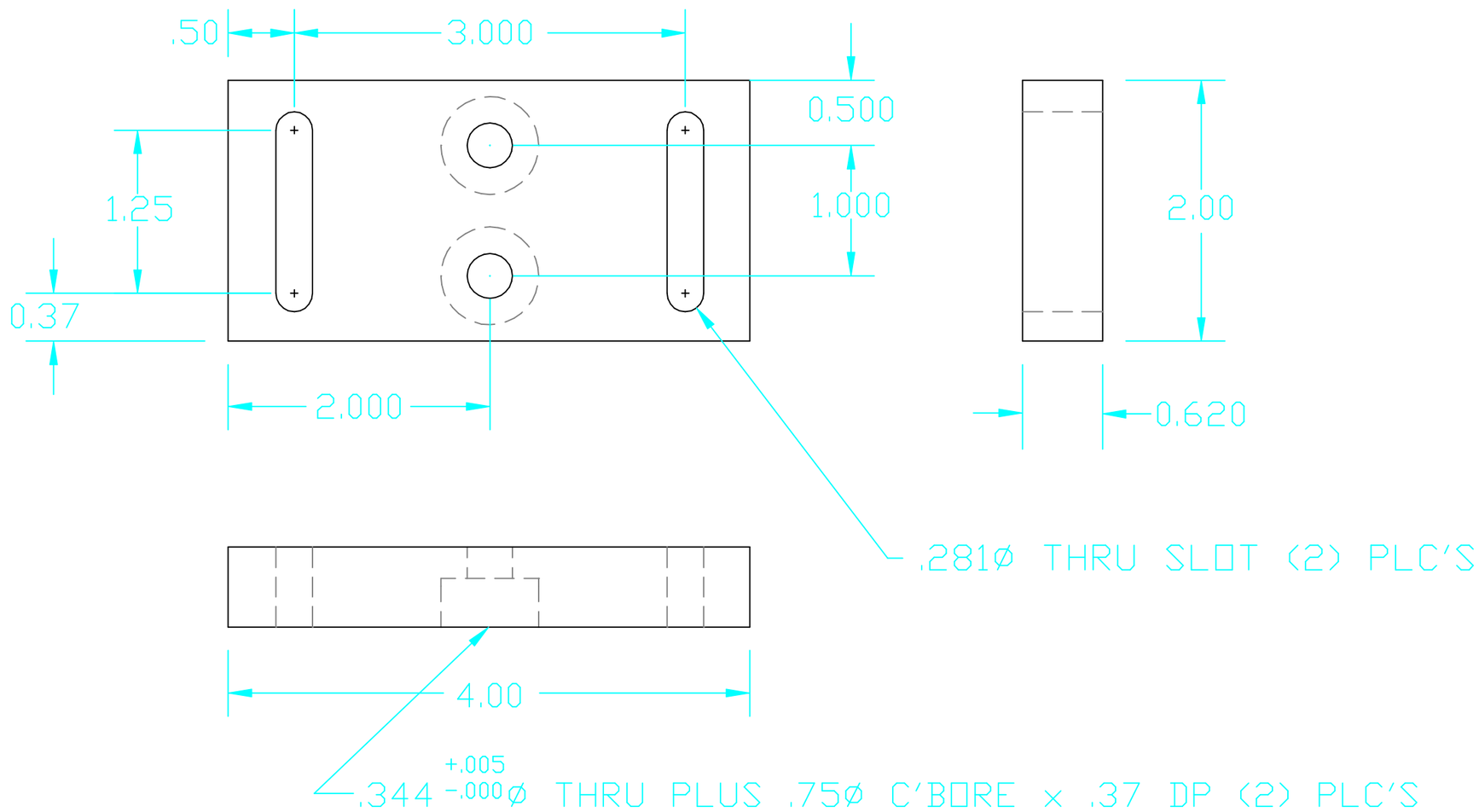

UNLESS OTHERWISE SPECIFIED
DIMENSIONS ARE IN INCHES

TOLERANCES:
FRACTIONAL ±1/16(.16)
ANGULAR ± 1°
TWO PLACE DECIMAL ±.01(.025)
THREE PLACE DECIMAL ±.005(.013)

FINISHED SURFACE RMS 63
BREAK CORNERS IN: OUT: .02
REMOVE ALL BURRS

MATERIAL:	HEAT TREAT:	FINISH:
6061-T6 ALUM.	-	-

USED ON: - NEXT ASS'Y: D980327-A-D

DWG. NO.	DESCRIPTION
REFERENCE DRAWINGS	

REV	DESCRIPTION	DCC	SYS	DET	CDS	VE	CC	BT	CHECK	DRWN	DATE
A	INITIAL RELEASE									MASON	3/20/00
00	PRE-RELEASE									K.MASON	8/12/98

ISSUE DESCRIPTION

CALIFORNIA INSTITUTE OF TECHNOLOGY
MASSACHUSETTS INSTITUTE OF TECHNOLOGY

WFS MOUNTING PLATE
ISC TABLE ASSEMBLY
-
-

CAD FILE	SIZE	DWG. NO.
D980328-A.dwg	B	D980328-A-D
SCALE FULL		SHEET 1 OF 1