NOTES: (UNLESS OTHERWISE SPECIFIED)

1. CUTTING FLUIDS TO BE WATER SOLUBLE AND FREE OF SULFUR, CHLORINE, & SILICONE.
2. STEEL STAMP OR ENGRAVE THE DRAWING PART NUMBER ON NOTED FACE OF PART FOLLOWED BY "S/N", THEN A THREE DIGIT SERIAL NUMBER. SERIAL NUMBERS TO START AT 001 FOR FIRST PART AND PROCEED IN A CONSECUTIVE MANNER TO A MAXIMUM OF 999, FOR EACH SUCCEEDING PART PRODUCED. USE 0.13 HIGH CHARACTERS.
   EXAMPLE: D990038-A S/N 001

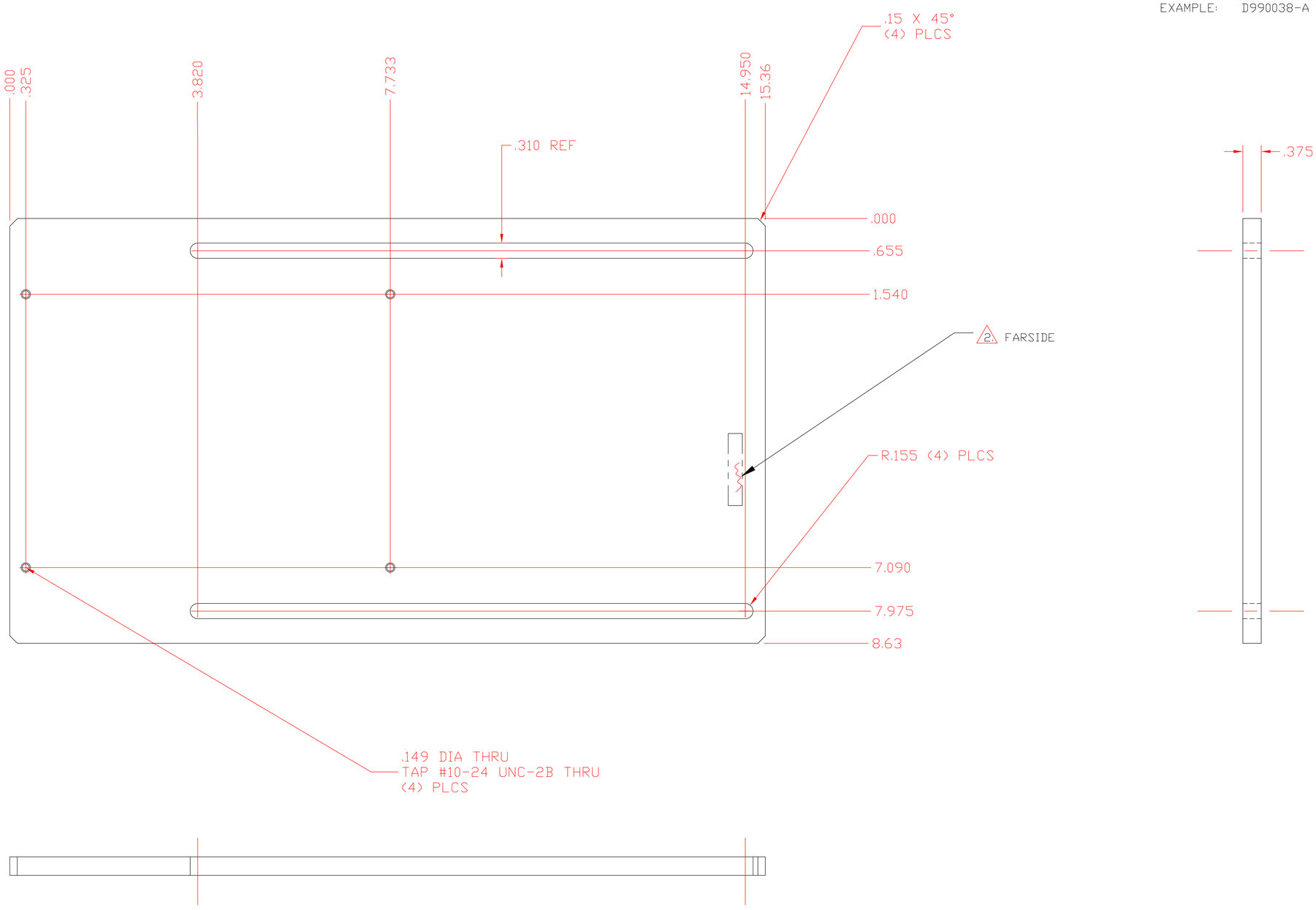

DWG. NO.	DESCRIPTION
REFERENCE DRAWINGS	

UNLESS OTHERWISE SPECIFIED
DIMENSIONS ARE IN FEET [cm]

TOLERANCES:
FRACTIONAL ± 1/64
ANGULAR ± 1/2°
ANGULARMACH ± BEND ±
TWO PLACE DECIMAL ±.01
THREE PLACE DECIMAL ±.003
FINISHED SURFACE RMS
BREAK CORNERS .005 - .020
REMOVE ALL BURRS

MATERIAL: .375 THICK TYPE 6061-T6 ALUMINUM ALLOY
HEAT TREAT:
FINISH:
USED ON:
NEXT ASS'Y: D990238

REV	DESCRIPTION	DCN NUMBER	-	APPR'D	CHECK	DRWN	DATE
A	RELEASE	E990210	-	-	-	KABOT	5-13-99

ISSUE DESCRIPTION

LIGO CALIFORNIA INSTITUTE OF TECHNOLOGY
MASSACHUSETTS INSTITUTE OF TECHNOLOGY

PLATE BEAM DUMP
BACKPLATE

CAD FILE: PL_BDMP_15-3PL.dwg
SIZE: C
DWG. NO.: D990240-A
SCALE: NTS
SHEET: 1 OF 1