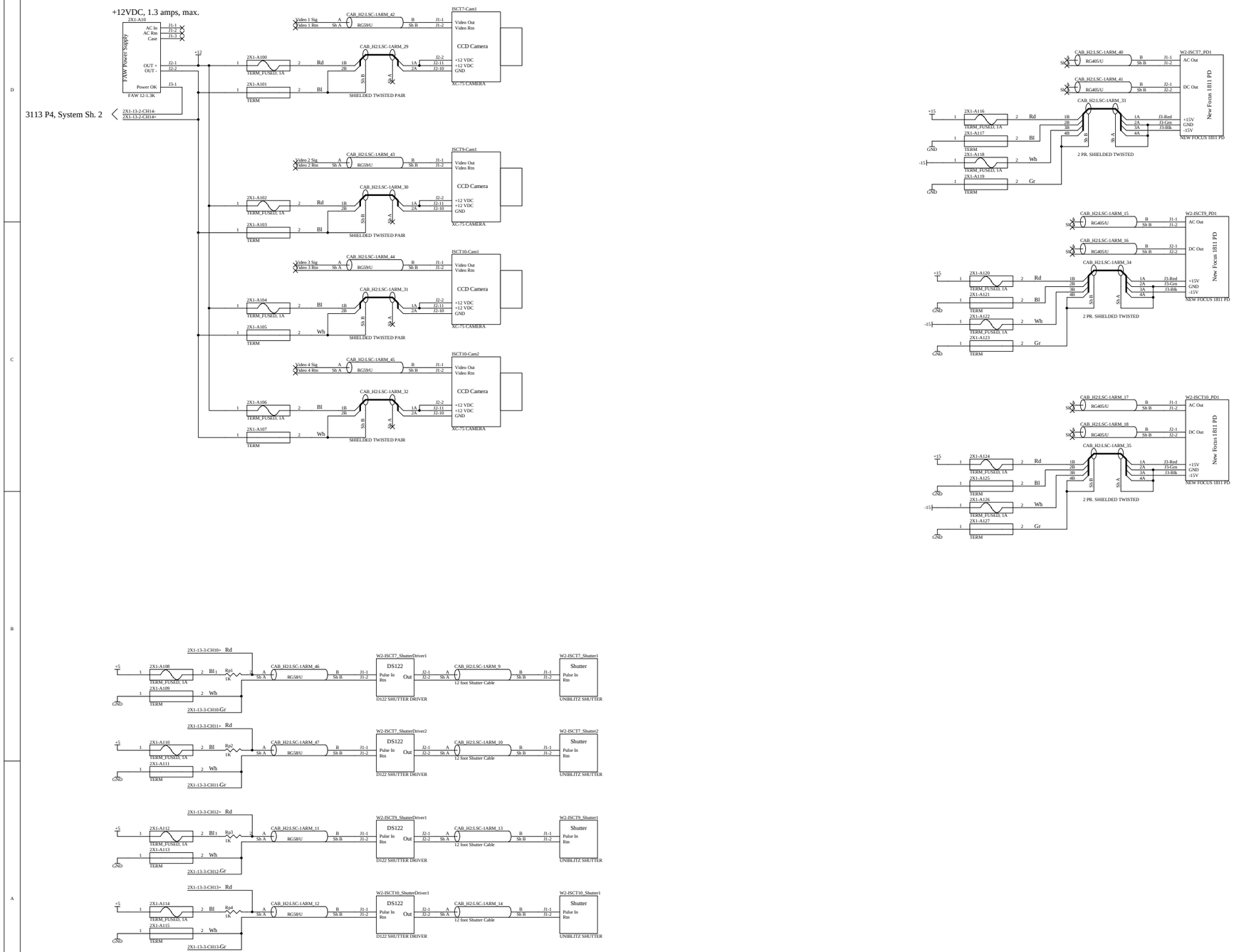

Title: ***WA 2K One Arm Test Auxiliary Controls***		*LIGO Laboratory* *California Institute of Technology* *Massachusetts Institute of Technology*	LIGO
Size: D	DCC Number: D900626	SCH / PCB Revision: 00	Engineer: *J. Heefner*
File: K:\ltvcad\ligo\users\jay\LSC1ArmSystem\LSC1ArmSystemAux1.Sch			Date: 19-Oct-1999 / Time: 09:09:51 / Sheet 1 of 2

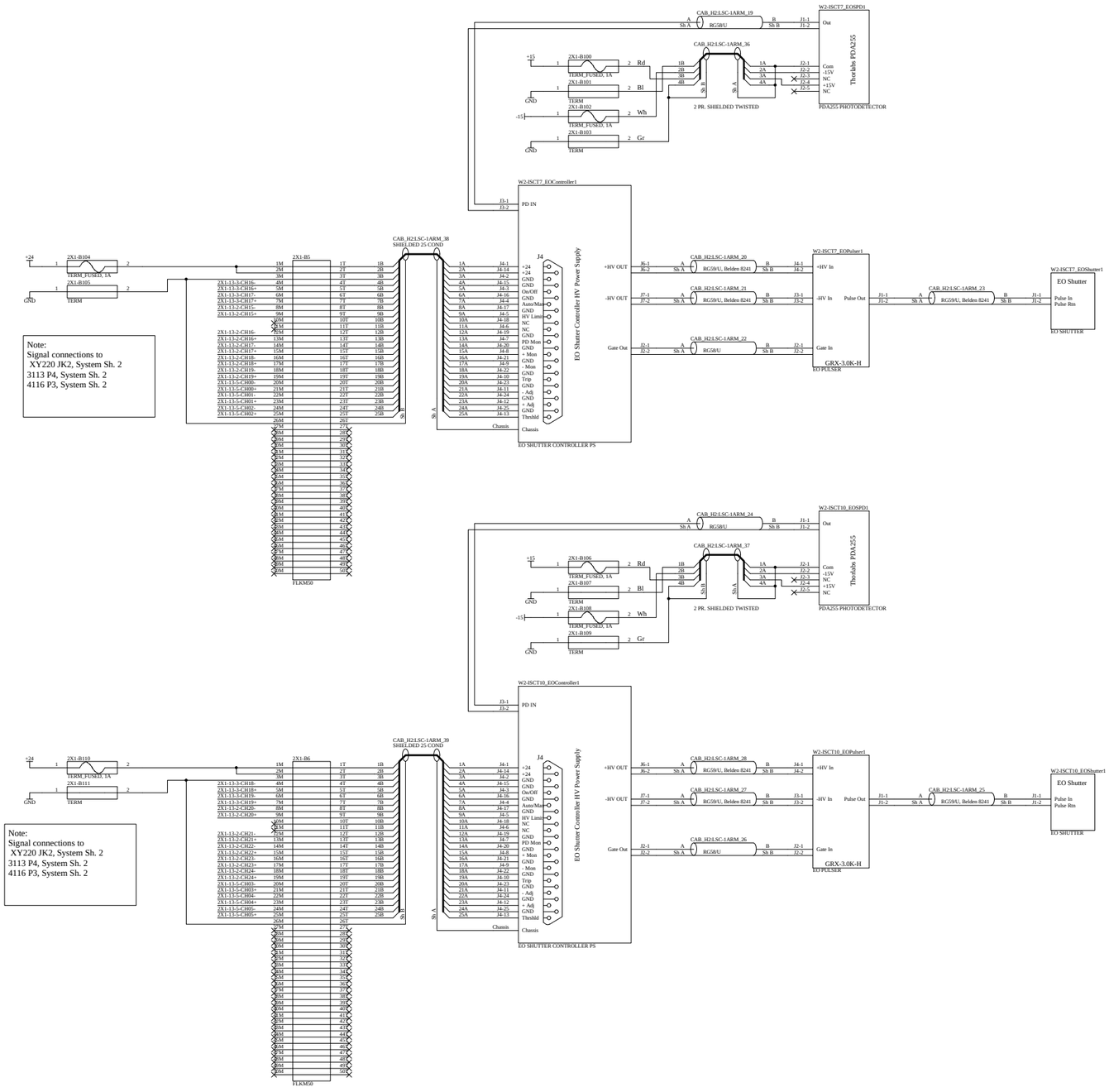

Note:
Signal connections to
XY220 JK2, System Sh. 2
3113 P4, System Sh. 2
4116 P3, System Sh. 2

Note:
Signal connections to
XY220 JK2, System Sh. 2
3113 P4, System Sh. 2
4116 P3, System Sh. 2

Title: *WA 2K One Arm Test Auxiliary Controls*		*LIGO Laboratory* *California Institute of Technology* *Massachusetts Institute of Technology*	LIGO
Size: D	DCC Number: D990626	SCH / PCB Revision: 00	Engineer: *J. Heefner*
Date: 19-Oct-1999	Time: 09:10:01	Sheet 2 of 2	
File: K:\ligo\caltech\user\jay\LSC1ArmSystem\LSC1ArmSystemAux2.Sch			