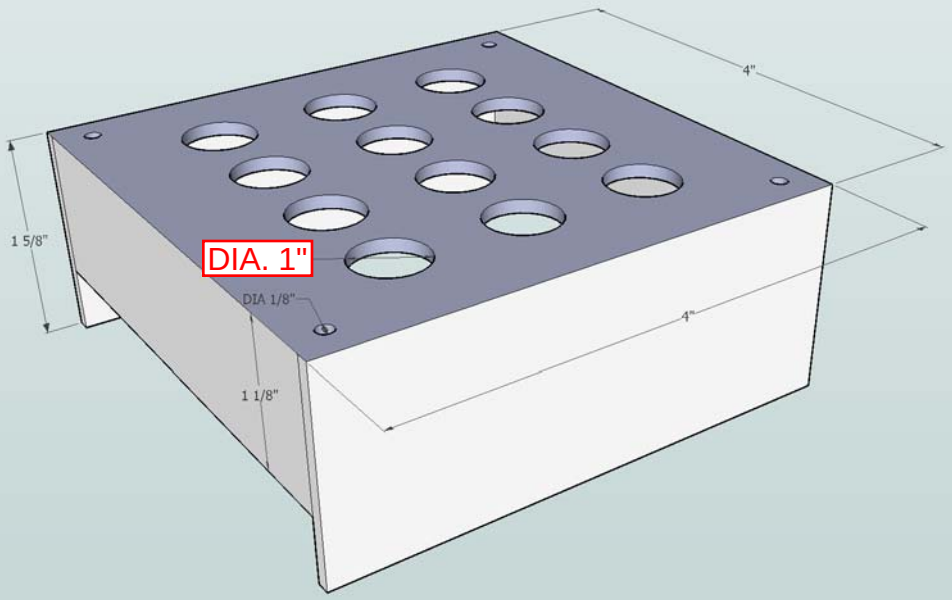
4"
1 5/8"
DIA. 1"
DIA 1/8"
4"
1 1/8"