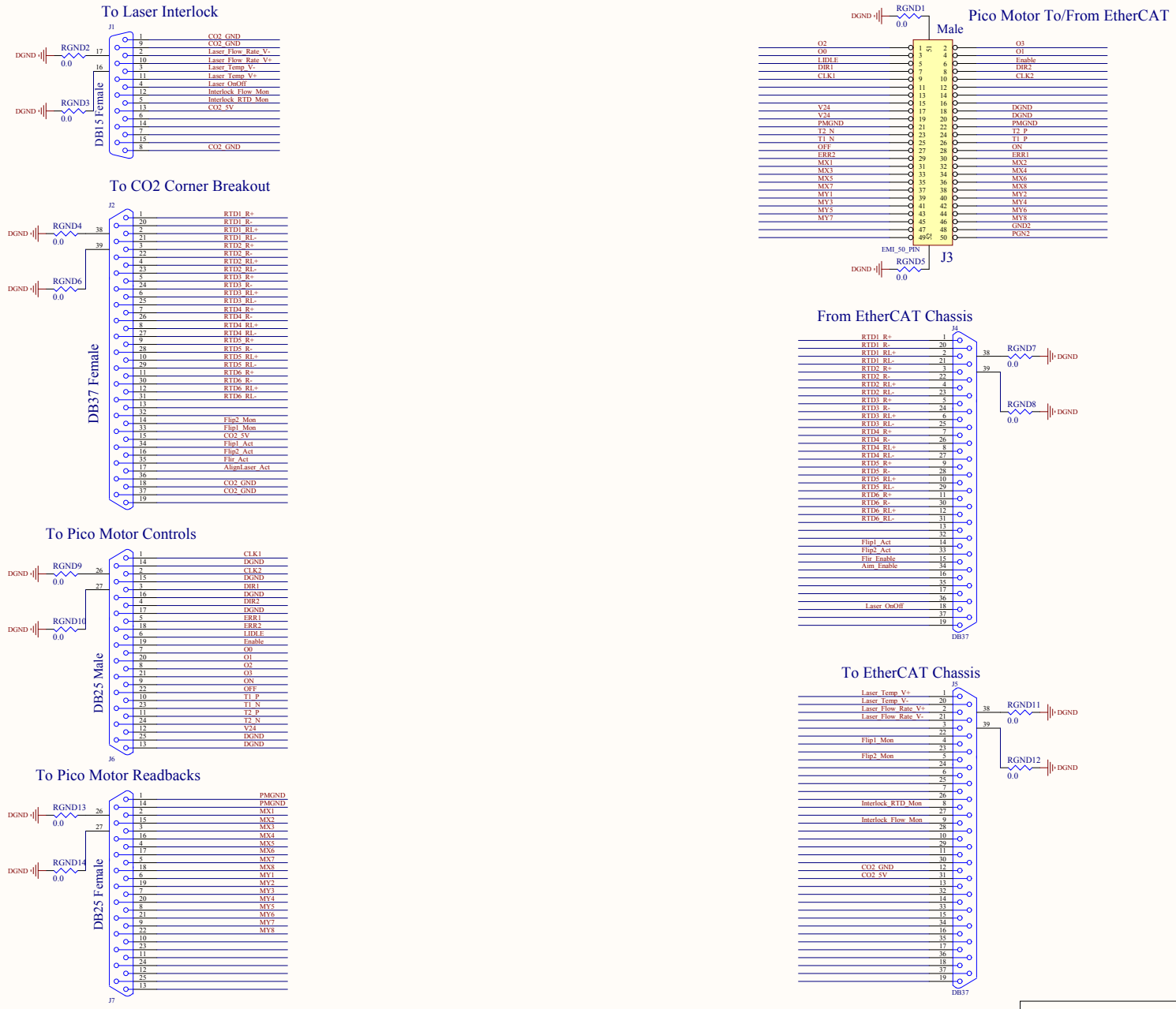
To Laser Interlock
J1
DB15 Female
DGND
RGND2
RGND3
0.0
17
16
1 CO2_GND
9 CO2_GND
2 Laser_Flow_Rate_V-
10 Laser_Flow_Rate_V+
3 Laser_Temp_V-
11 Laser_Temp_V+
4 Laser_OnOff
12 Interlock_Flow_Mon
5 Interlock_RTD_Mon
13 CO2_5V
6
14
7
15
8 CO2_GND
To CO2 Corner Breakout
J2
DB37 Female
RGND4
RGND6
38
39
1 RTD1_R+
20 RTD1_R-
2 RTD1_RL+
21 RTD1_RL-
3 RTD2_R+
22 RTD2_R-
4 RTD2_RL+
23 RTD2_RL-
5 RTD3_R+
24 RTD3_R-
6 RTD3_RL+
25 RTD3_RL-
7 RTD4_R+
26 RTD4_R-
8 RTD4_RL+
27 RTD4_RL-
9 RTD5_R+
28 RTD5_R-
10 RTD5_RL+
29 RTD5_RL-
11 RTD6_R+
30 RTD6_R-
12 RTD6_RL+
31 RTD6_RL-
13
32
14 Flip2_Mon
33 Flip1_Mon
15 CO2_5V
34 Flip1_Act
16 Flip2_Act
35 Flir_Act
17 AlignLaser_Act
36
18 CO2_GND
37 CO2_GND
19
To Pico Motor Controls
J6
DB25 Male
RGND9
RGND10
26
27
1 CLK1
14 DGND
2 CLK2
15 DGND
3 DIR1
16 DGND
4 DIR2
17 DGND
5 ERR1
18 ERR2
6 LIDLE
19 Enable
7 O0
20 O1
8 O2
21 O3
9 ON
22 OFF
10 T1_P
23 T1_N
11 T2_P
24 T2_N
12 V24
25 DGND
13 DGND
To Pico Motor Readbacks
J7
DB25 Female
RGND13
RGND14
26
27
1 PMGND
14 PMGND
2 MX1
15 MX2
3 MX3
16 MX4
4 MX5
17 MX6
5 MX7
18 MX8
6 MY1
19 MY2
7 MY3
20 MY4
8 MY5
21 MY6
9 MY7
22 MY8
10
23
11
24
12
25
13
Pico Motor To/From EtherCAT
Male
J3
EMI_50_PIN
RGND1
RGND5
O2 1 2 O3
O0 3 4 O1
LIDLE 5 6 Enable
DIR1 7 8 DIR2
CLK1 9 10 CLK2
11 12
13 14
V24 15 16
V24 17 18 DGND
PMGND 19 20 DGND
T2_N 21 22 PMGND
T1_N 23 24 T2_P
OFF 25 26 T1_P
ERR2 27 28 ON
MX1 29 30 ERR1
MX3 31 32 MX2
MX5 33 34 MX4
MX7 35 36 MX6
MY1 37 38 MX8
MY3 39 40 MY2
MY5 41 42 MY4
MY7 43 44 MY6
45 46 MY8
47 48 GND2
49 50 PGN2
From EtherCAT Chassis
J4
DB37
RGND7
RGND8
38
39
RTD1_R+ 1
RTD1_R- 20
RTD1_RL+ 2
RTD1_RL- 21
RTD2_R+ 3
RTD2_R- 22
RTD2_RL+ 4
RTD2_RL- 23
RTD3_R+ 5
RTD3_R- 24
RTD3_RL+ 6
RTD3_RL- 25
RTD4_R+ 7
RTD4_R- 26
RTD4_RL+ 8
RTD4_RL- 27
RTD5_R+ 9
RTD5_R- 28
RTD5_RL+ 10
RTD5_RL- 29
RTD6_R+ 11
RTD6_R- 30
RTD6_RL+ 12
RTD6_RL- 31
13
32
Flip1_Act 14
Flip2_Act 33
Flir_Enable 15
Aim_Enable 34
16
35
17
36
Laser_OnOff 18
37
19
To EtherCAT Chassis
J5
DB37
RGND11
RGND12
38
39
Laser_Temp_V+ 1
Laser_Temp_V- 20
Laser_Flow_Rate_V+ 2
Laser_Flow_Rate_V- 21
3
22
Flip1_Mon 4
23
Flip2_Mon 5
24
6
25
7
26
Interlock_RTD_Mon 8
27
Interlock_Flow_Mon 9
28
10
29
11
30
CO2_GND 12
CO2_5V 31
13
32
14
33
15
34
16
35
17
36
18
37
19
Title
CO2P Ethercat Splitter Chassis
Size: C
DCC Number: D1201419
Drawn by: Ben Abbott
Date: 10/23/2012
Revision: v1
Ligo Project
California Institute of Technology
Massachusetts Institute of Technology
LIGO
Sheet 1 of 1

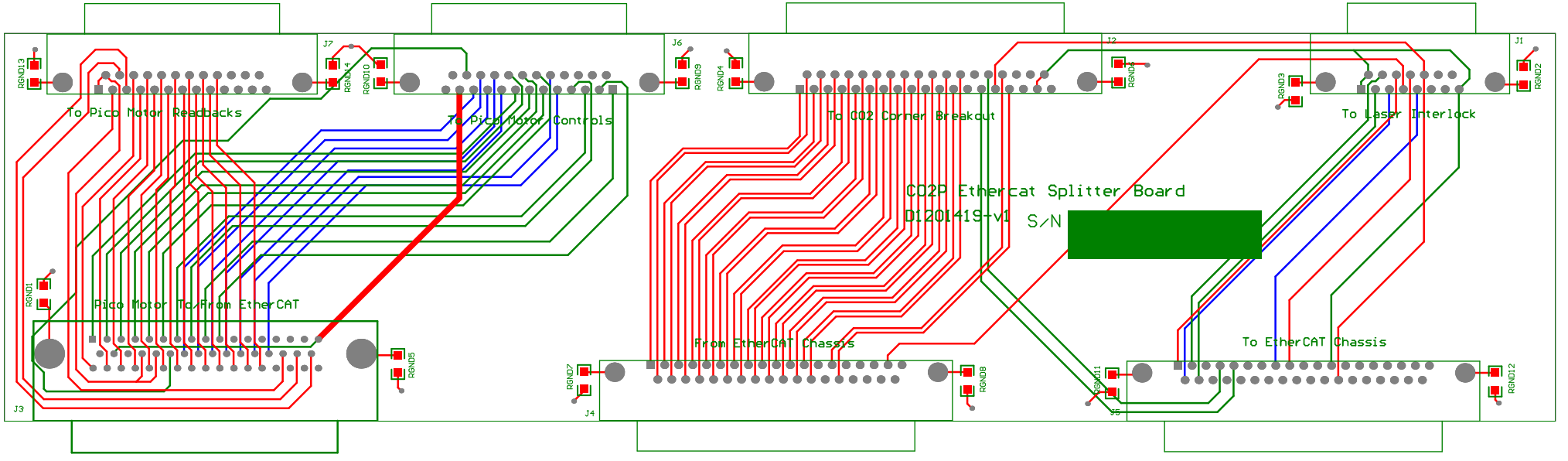
To Pico Motor Readbacks
To Pico Motor Controls
To CO2 Corner Breakout
To Laser Interlock
CO2P Ethercat Splitter Board
D120141S-v1
S/N
Pico Motor To/From EtherCAT
From EtherCAT Chassis
To EtherCAT Chassis
J1
J2
J3
J4
J5
J6
J7
RGND1
RGND2
RGND3
RGND4
RGND5
RGND6
RGND7
RGND8
RGND9
RGND10
RGND11
RGND12
RGND13
RGND14