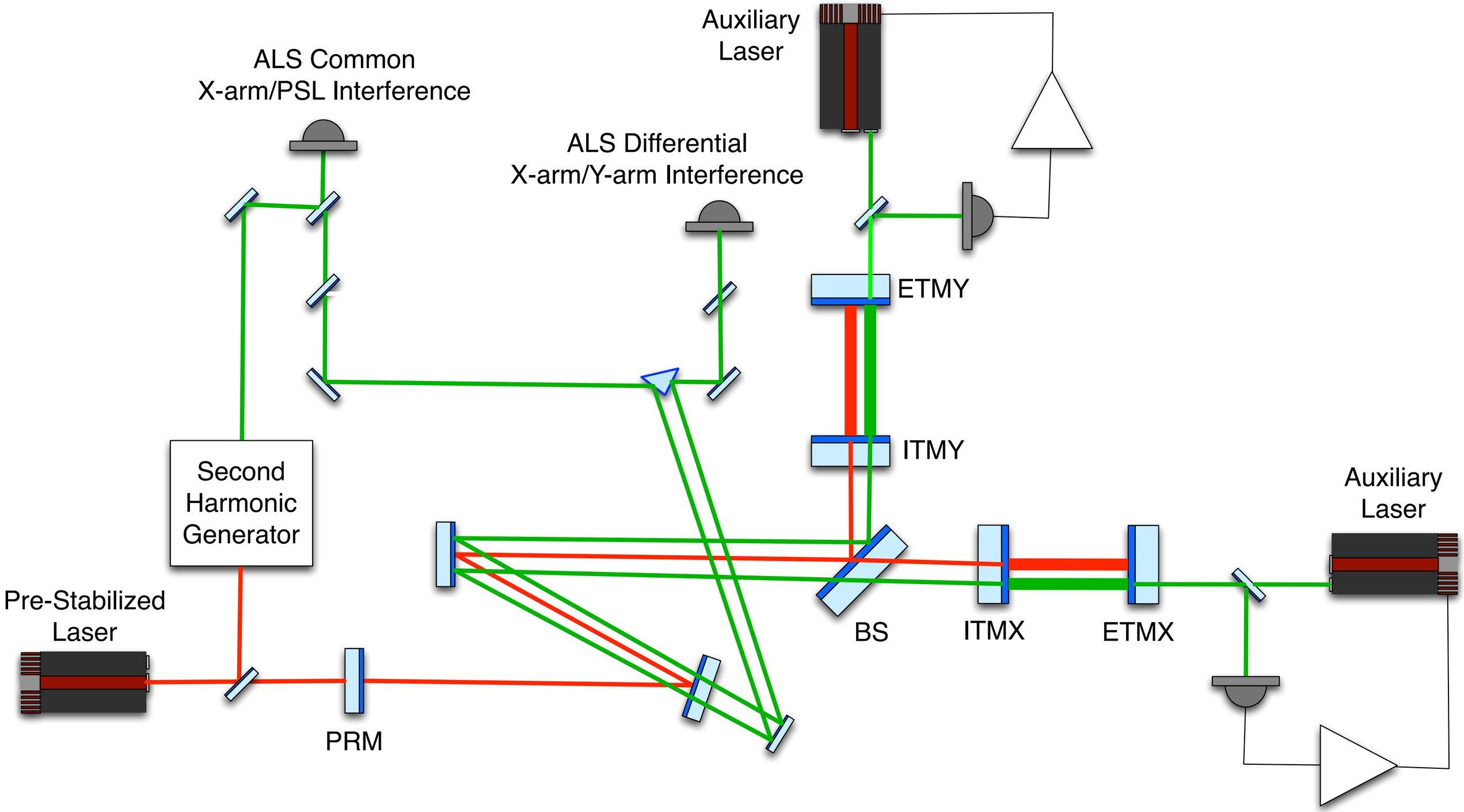
Auxiliary
Laser
ALS Common
X-arm/PSL Interference
ALS Differential
X-arm/Y-arm Interference
ETMY
ITMY
Second
Harmonic
Generator
Auxiliary
Laser
Pre-Stabilized
Laser
BS
ITMX
ETMX
PRM