O2 CALIBRATION SCHEME

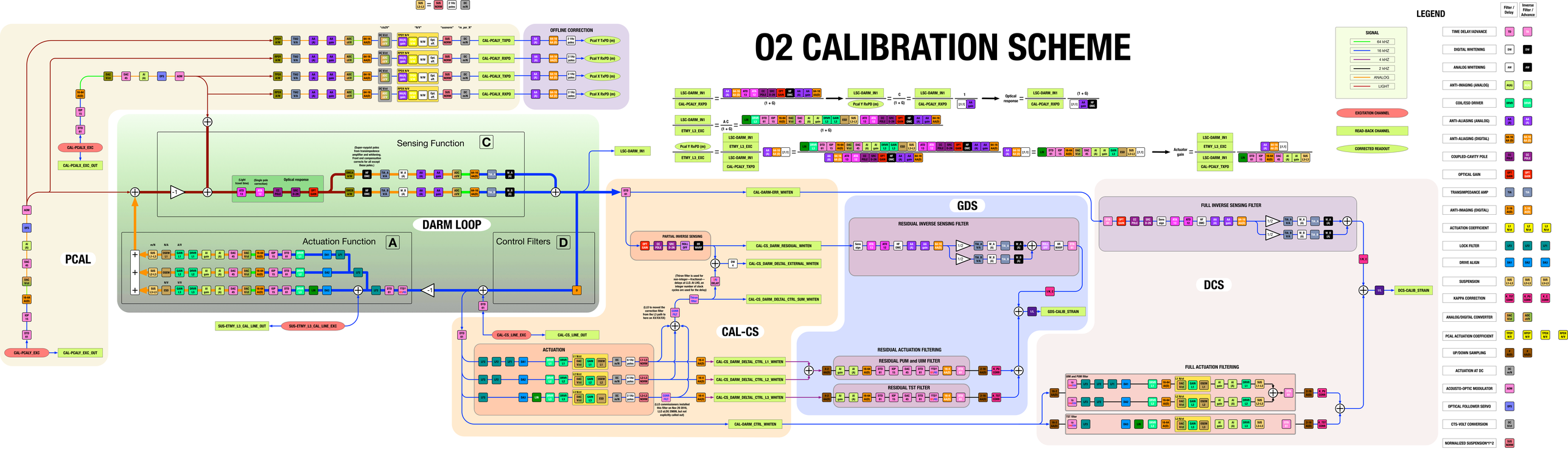

G1501518-v15 March 8, 2016

LEGEND

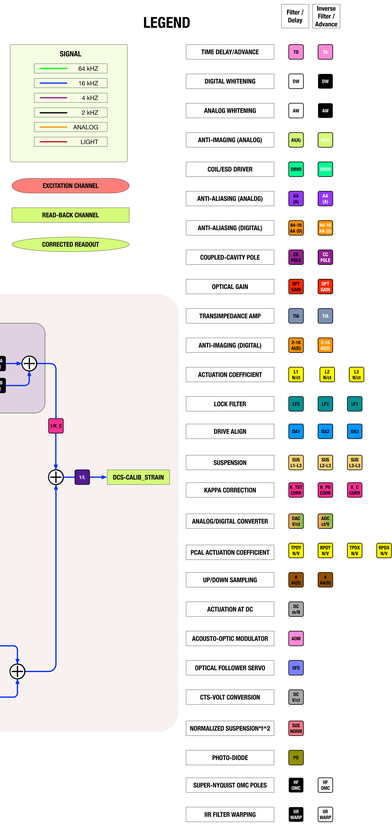

† The blocks with white letter are inverse of it counterparts in blocks with black letters
* Partial correction (when full correction is not possible)