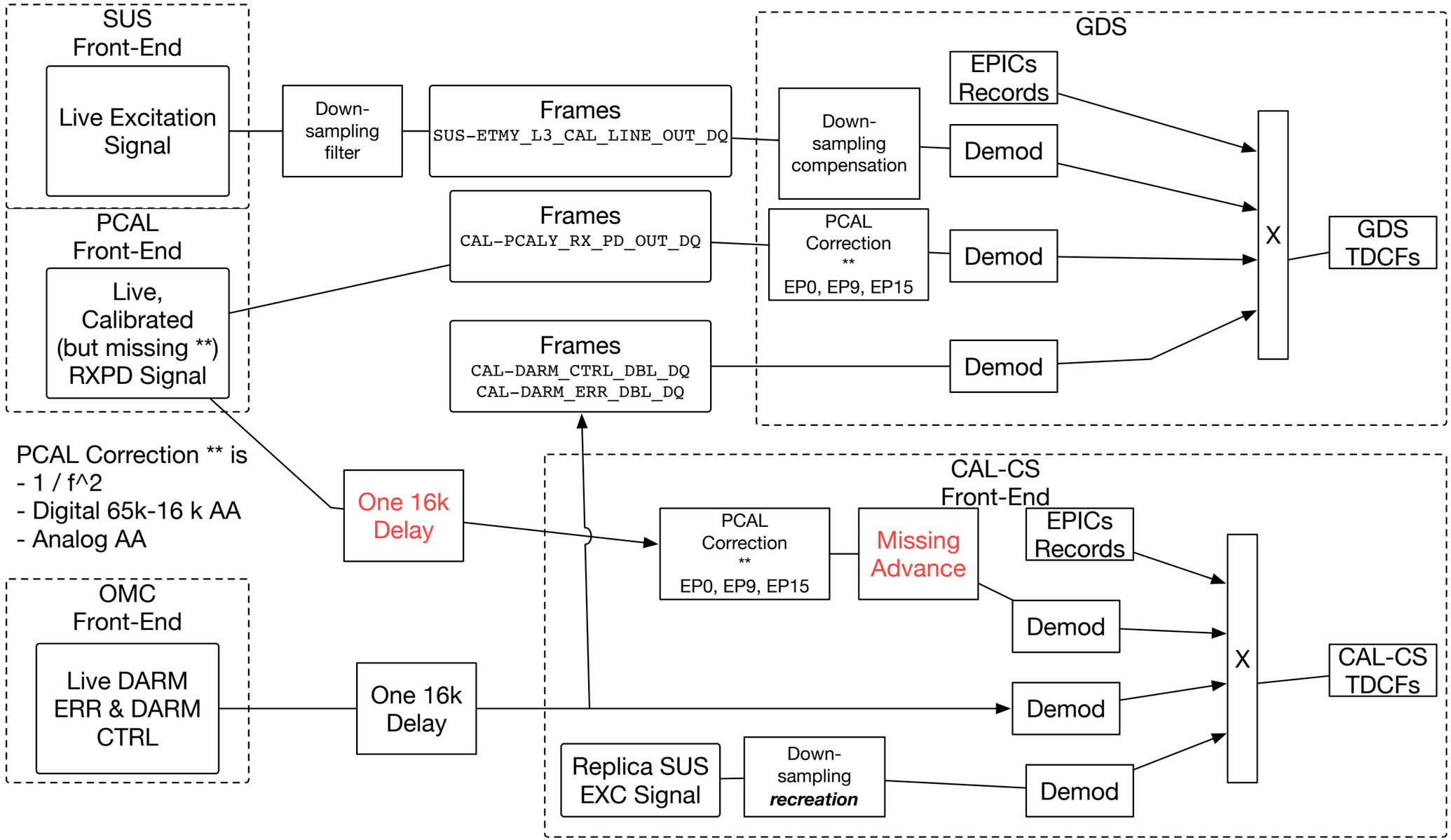
SUS
Front-End
Live Excitation Signal
Down-sampling filter
Frames
SUS-ETMY_L3_CAL_LINE_OUT_DQ
GDS
EPICs Records
Down-sampling compensation
Demod
PCAL
Front-End
Live, Calibrated (but missing **) RXPD Signal
Frames
CAL-PCALY_RX_PD_OUT_DQ
PCAL Correction ** EP0, EP9, EP15
Demod
X
GDS TDCFs
Frames
CAL-DARM_CTRL_DBL_DQ
CAL-DARM_ERR_DBL_DQ
Demod
PCAL Correction ** is
- 1 / f^2
- Digital 65k-16 k AA
- Analog AA
One 16k Delay
CAL-CS
Front-End
PCAL Correction ** EP0, EP9, EP15
Missing Advance
EPICs Records
Demod
OMC
Front-End
Live DARM ERR & DARM CTRL
One 16k Delay
Demod
X
CAL-CS TDCFs
Replica SUS EXC Signal
Down-sampling recreation
Demod