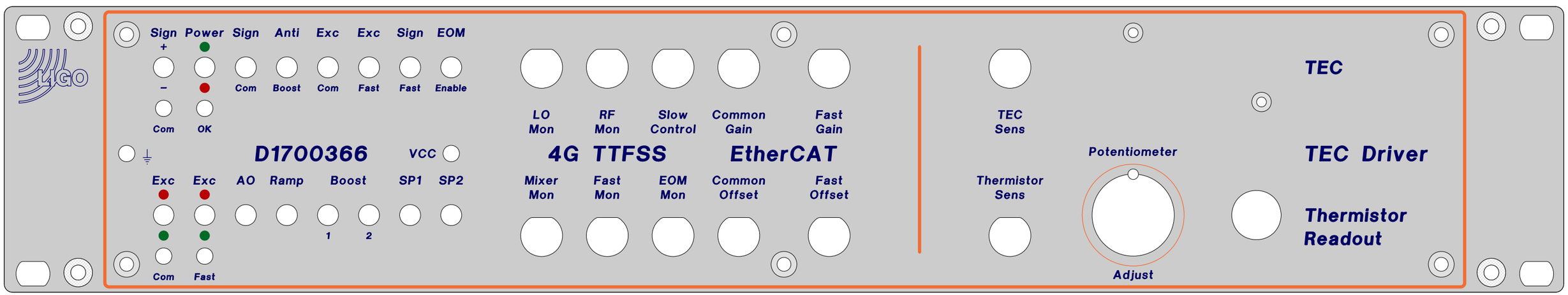
Sign
Power
Sign
Anti
Exc
Exc
Sign
EOM
+
–
Com
Boost
Com
Fast
Fast
Enable
Com
OK
LO Mon
RF Mon
Slow Control
Common Gain
Fast Gain
TEC Sens
TEC
D1700366
VCC
4G TTFSS
EtherCAT
Potentiometer
TEC Driver
Exc
Exc
AO
Ramp
Boost
SP1
SP2
Mixer Mon
Fast Mon
EOM Mon
Common Offset
Fast Offset
Thermistor Sens
Thermistor Readout
1
2
Com
Fast
Adjust