REV.	DATE	DCN #	DRAWING TREE #
v3	28 MAR 2019	E1900228	-
-	-	-	-
-	-	-	-

NOTES CONTINUED:

(5) SCRIBE, ENGRAVE (A VIBRATORY TOOL MAY BE USED), LASER MARK OR MECHANICALLY STAMP (NO INKS OR DYES) DRAWING PART NUMBER, REVISION (AND VARIANT OR "TYPE" IF APPLICABLE) ON NOTED SURFACE OF PART FOLLOWED ON THE NEXT LINE WITH A THREE DIGIT SERIAL NUMBER. SERIAL NUMBERS START AT 001 FOR THE FIRST ARTICLE AND PROCEED CONSECUTIVELY. USE MINIMUM 0.12" HIGH CHARACTERS, UNLESS THE SIZE OF THE PART DICTATES SMALLER CHARACTERS. EXAMPLE: DXXXXXXX-VY, TYPE-XX, S/N XXX

6. MACHINE ALL SURFACES TO REMOVE OXIDES AND MILL FINISH, USE OF ABRASIVE REMOVAL TECHNIQUES IS NOT ALLOWED. REFER TO LIGO SPECIFICATION E0900364

7. ALL PARTS SHALL BE MANUFACTURED IN ACCORDANCE WITH LIGO SPECIFICATION E0900364

8. ALL MATERIAL IS TO BE VIRGIN MATERIAL (i.e. NO WELD REPAIRS, PLUGS OR RECYCLED MATERIAL). NO REPAIRS SHALL BE MADE UNLESS APPROVED IN ADVANCE, AND IN WRITING, BY LIGO LABORATORY. REFER TO LIGO SPECIFICATION E0900364

9. APPROXIMATE WEIGHT = 1176 LB.

(10) MACHINING VENDOR TO USE CENTER PUNCH MARK LOCATED AT 0° ON EACH HEAD AS THE STARTING POINT FOR THE NATURAL CENTERLINE BOLT PATTERN.

11. ALL FORGING MFG NUMBERS TO BE LEFT INTACT.

(12) FOR WELDING AND HELIUM LEAK TEST SPECIFICATIONS REFER TO LIGO SPECIFICATION E1900079.

13. IF FIT UP GAPS OCCUR, INCREASE SIZE OF WELD TO MAINTAIN FULL WELD.

14. CONFLAT FLANGES ARE TO BE PROTECTED WITH RIDGID COVERS AT ALL TIMES DURING AND AFTER MACHINING.

(15) MATERIAL: MAKE FROM D970427.

16. HEADS ARE ASME F&D

17. STEAM CLEAN & WRAP IN POLYETHELENE TO PREVENT CONTAMINATION DURING SHIPPING.

18. FLANGES MUST BE PACKAGED, HANDLED, AND SHIPPED IN SUCH A MANNER AS TO MAINTAIN SPECIFIED SURFACE FINISHES AND FLATNESS TOLERANCES.

19. FLANGES WILL BE USED IN ULTRA HIGH VACUUM SERVICE.

(20) PORT LOCATIONS, DIMENSIONS TAKEN FROM CENTER OF OUTER FLANGE SURFACE.

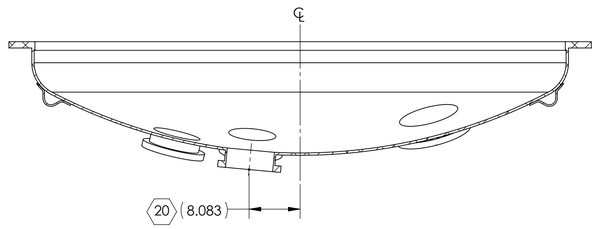

SECTION A-A

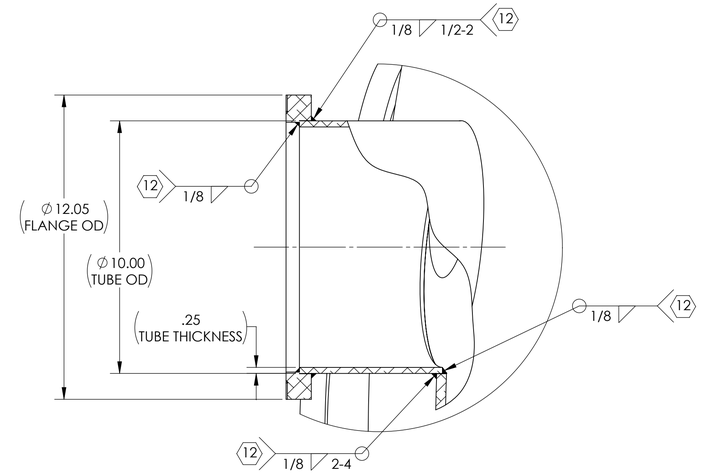

DETAIL B
SCALE 1 : 3
TYPICAL 2 PLACES

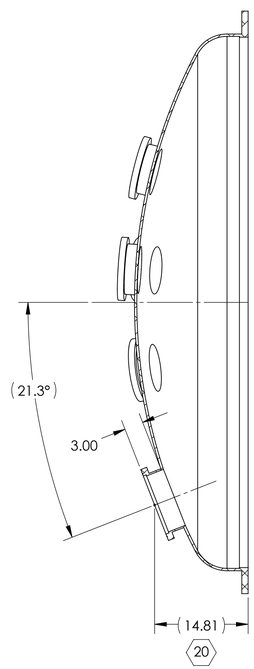

SECTION D-D
SCALE 1 : 12
ROTATED ⌒ 41.3°

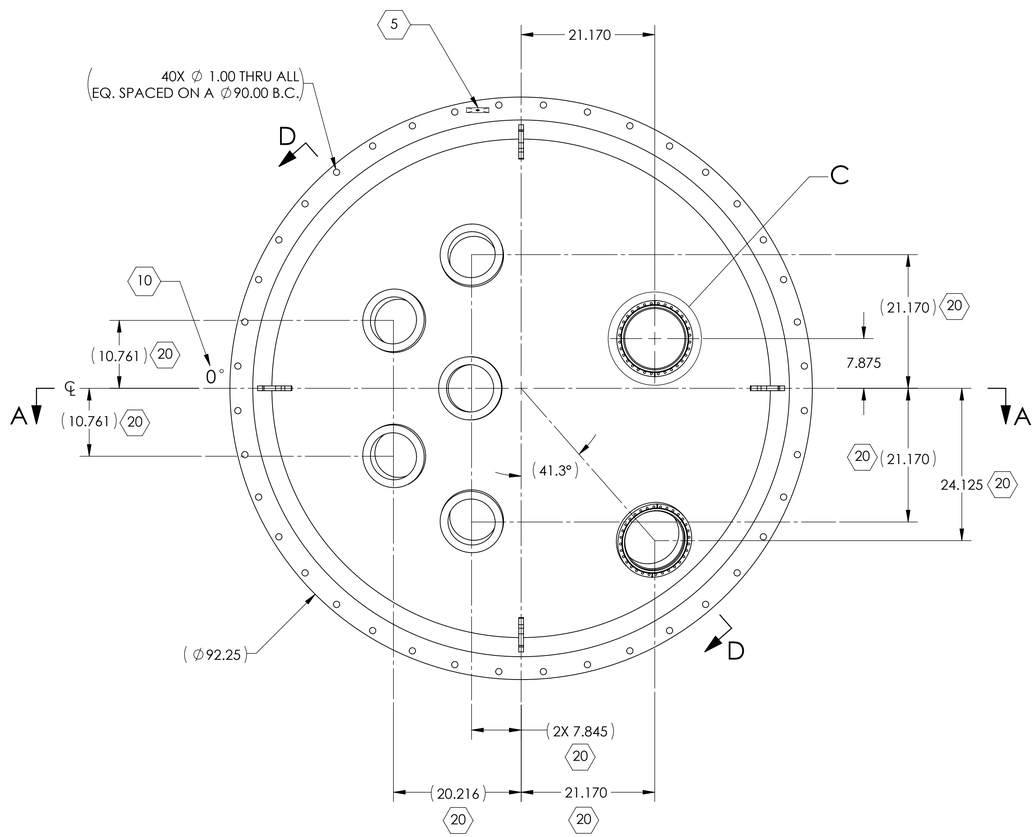

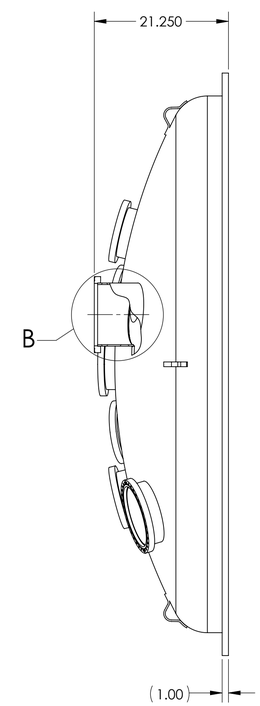

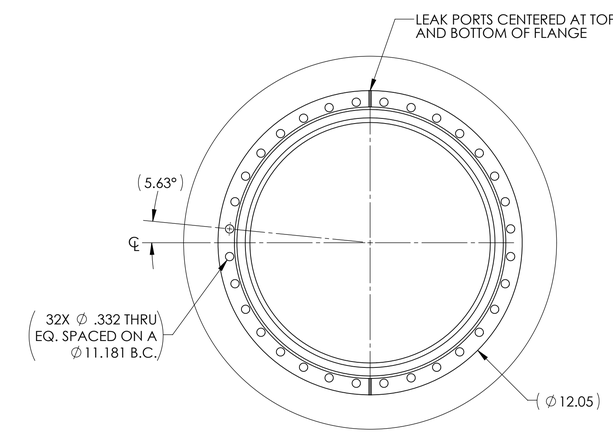

DETAIL C
SCALE 1 : 3
TYPICAL 2 PLACES

PRELIMINARY
NOT FOR PRODUCTION

DIMENSIONS ARE IN INCHES

TOLERANCES:
.XX ± .03
.XXX ± .015

ANGULAR ± 1.0°

NOTES AND TOLERANCES: (UNLESS OTHERWISE SPECIFIED)

1. INTERPRET DRAWING PER ASME Y14.5-1994.
2. REMOVE ALL SHARP EDGES, .005-.015.
3. DO NOT SCALE FROM DRAWING.
4. ALL MACHINING FLUIDS MUST BE FULLY SYNTHETIC, FULLY WATER SOLUBLE AND FREE OF SULFUR, SILICONE, AND CHLORINE.

MATERIAL 304 SSTL (15)

FINISH NA

LIGO CALIFORNIA INSTITUTE OF TECHNOLOGY
MASSACHUSETTS INSTITUTE OF TECHNOLOGY

SYSTEM A+

SUB-SYSTEM VE

NEXT ASSY D1900059

PART NAME A+ HAM7 84in COVER

DESIGNER			SIZE	DWG. NO.	REV.
DRAFTER	D. GRIFFITH	11 MAR 2019	D	D1900059	v3
CHECKER	SEE DCC	SEE DCC			
APPROVAL	SEE DCC	SEE DCC	SCALE: 1:12	PROJECTION:	SHEET 1 OF 1

PART PDM VERSION: v-016
DWG PDM VERSION: v-016
D1900059 A+ HAM7 84in Cover